GREENHECK
Building Value in Air.

Document 471560
Model CUE Direct Drive
Model CUBE Belt Drive
Upblast Centrifugal Roof Exhaust

Installation, Operation and Maintenance Manual

Please read and save these instructions for future reference. Read carefully before attempting to assemble, install, operate or maintain the product described. Protect yourself and others by observing all safety information. Failure to comply with these instructions will result in voiding of the product warranty and may result in personal injury and/or property damage.

Direct Drive Upblast Centrifugal Exhaust Fan



These fans are specifically designed for roof and wall mounted applications. The maximum continuous operating temperature for fan sizes 099-300 is 400°F *(204°C)* and for fan sizes 060-095 is 130°F *(54°C)*. Direct drive fans are available with nominal wheel diameters ranging from 9 to 30 inches *(229 to 762 mm)* (060-300 unit sizes). Each fan shall bear a permanently affixed manufacturer's engraved metal nameplate containing the model number and individual serial number.

Belt Drive Upblast Centrifugal Exhaust Fan

These fans are specifically designed for roof and wall mounted applications. The maximum continuous operating temperature is 400°F *(204°C)*. Belt drive fans are available with nominal wheel diameters ranging from 10 to 48 inches *(254 to 1219 mm*) (099-480 unit sizes). Each fan shall bear a permanently affixed manufacturer's engraved metal nameplate containing the model number and individual serial number.

General Safety Information

Only qualified personnel should install this fan. Personnel should have a clear understanding of these instructions and should be aware of general safety precautions. Improper installation can result in electric shock, possible injury due to coming in contact with moving parts, as well as other potential hazards. Other considerations may be required if high winds or seismic activity is present. If more information is needed, contact a licensed professional engineer before moving forward.

1. Follow all local electrical and safety codes, as well as the National Electrical Code (NEC) and the National Fire Protection Agency (NFPA), where applicable. Follow the Canadian Electrical Code (CEC) in Canada.
2. The rotation of the wheel is critical. It must be free to rotate without striking or rubbing any stationary objects.
3. Motor must be securely and adequately grounded.
4. Do not spin fan wheel faster than max cataloged fan RPM. Adjustments to fan speed significantly affects motor load. If the fan RPM is changed, the motor current should be checked to make sure it is not exceeding the motor nameplate amps.
5. Do not allow the power cable to kink or come in contact with oil, grease, hot surfaces or chemicals. Replace cord immediately if damaged.
6. Verify that the power source is compatible with the equipment.
7. Never open access doors to a duct while the fan is running.

DANGER
Always disconnect, lock and tag power source before installing or servicing. Failure to disconnect power source can result in fire, shock or serious injury.
CAUTION
When servicing the fan, motor may be hot enough to cause pain or injury. Allow motor to cool before servicing.
CAUTION
Precaution should be taken in explosive atmospheres.
DANGER
Pour écarter les risques d'incendie, de choc électrique ou de blessure grave, veiller à toujours débrancher, verrouiller et étiqueter la source de courant avant l'installation ou l'entretien.
ATTENTION
Lors de toute intervention sur la soufflante, le moteur peut être suffisamment chaud pour provoquer une douleur voire une blessure. Laisser le moteur refroidir avant toute maintenance.
ATTENTION
Faire preuve de précaution dans les atmosphères explosives.

Table of Contents

Receiving, Unpacking, Handling 2-3
Storage 3
Inspection and Maintenance During Storage 3
Removing from Storage 3
Dimensional Data 4
Installation
- General Ventilation Installation 4
- Sidewall Mounting Installation 5
- Commercial Kitchen Installation 5
- Grease Trap Installation 6
- Hinge Installation. 6
- UL Listed Emergency Smoke Control Installation . . 6
- Mounting for Severe Duty Installation 6-7

Pre-Starting Checks 7-8
Operation. 8
Inspection 8
Maintenance 8-9
- Tapered Bushing Hub Installation and Removal 8
- Bushing Installation 9
- Belt and Bearing Maintenance. 10
- Bearing Lubrication Schedule 10

Parts List 11
Fan Inlet Connections 11
Troubleshooting . . . . . Backcover
Our Commitment. . . . . Backcover

Receiving

Upon receiving the product, check to ensure all items are accounted for by referencing the delivery receipt or packing list. Inspect each crate or carton for shipping damage before accepting delivery. Alert the carrier of any damage detected. The customer will make notation of damage (or shortage of items) on the delivery receipt and all copies of the bill of lading which is countersigned by the delivering carrier. If damaged, immediately contact your representative. Any physical damage to the unit after acceptance is not the responsibility of the manufacturer.

Unpacking

Verify that all required parts and the correct quantity of each item have been received. If any items are missing, report shortages to your local representative to arrange for obtaining missing parts. Sometimes it is not possible that all items for the unit be shipped together due to availability of transportation and truck space. Confirmation of shipment(s) must be limited to only items on the bill of lading.

IMPORTANT

Do not lift by the fan hood. Avoid lifting fans in a way that will bend or distort fan parts. Never pass slings or timbers through the venturi of fan. Fans with special coatings or paints must be protected in handling to prevent damage.

Handling

Direct and Belt Drive Units

Lift Direct Drive unit on to the roof utilizing hooks under the horizontal supports. Evenly space the hooks using a minimum of four lifting straps. Use a spreader bar to ensure the straps do not come in contact with the unit, see Figure 1.

Figure 1

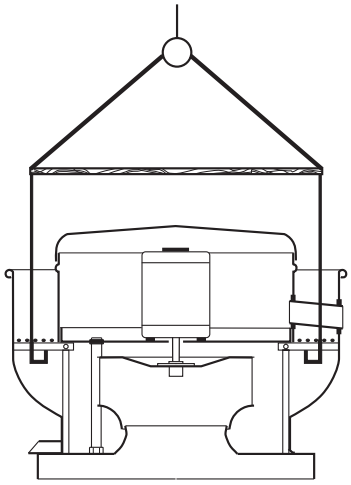

Figure 2

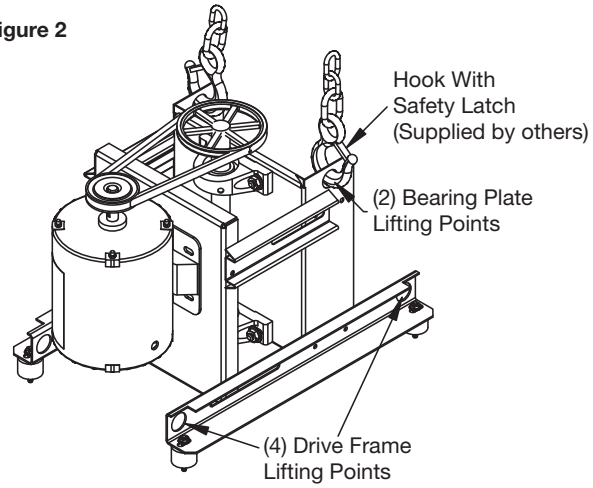

Figure 3

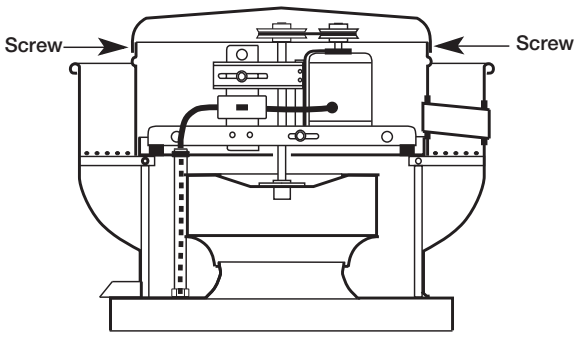

When lifting a Belt Drive unit onto the roof, use either the four lifting points on the drive frame or the two lifting points on the bearing plate if present, see Figure 2 for lifting points. Access to the drive frame is accomplished by removing the screws pointed out in Figure 3. The cover can then be removed and placed on a flat surface in an area protected from strong winds.

When the Direct and/or Belt Drive unit is on the roof, move fan to desired location using lifting points and fasten securely through mounting holes in base. Shims may be necessary depending upon roofing material thickness.

The motor amperage and voltage ratings must be checked for compatibility to supply voltage prior to final electrical connection. For Direct and/or Belt Drive installations, the electrical supply should be routed through the conduit chase located between the curb cap and the bottom of the motor compartment or through the breather tube. Wiring must conform to local and national codes.

Storage

Fans are protected against damage during shipment. If the unit cannot be installed and operated immediately, precautions need to be taken to prevent deterioration of the unit during storage. The user assumes responsibility of the fan and accessories while in storage. The manufacturer will not be responsible for damage during storage. These suggestions are provided solely as a convenience to the user.

Indoor

The ideal environment for the storage of fans and accessories is indoors, above grade, in a low humidity atmosphere which is sealed to prevent the entry of blowing dust, rain or snow. Temperatures should be evenly maintained between 30° to 110°F *(-1° to 43°C)* (wide temperature swings may cause condensation and "sweating" of metal parts). All accessories must be stored indoors in a clean, dry atmosphere. Remove any accumulations of dirt, water, ice or snow and wipe dry before moving to indoor storage. To avoid "sweating" of metal parts, allow cold parts to reach room temperature. To dry parts and packages, use a portable electric heater to get rid of any moisture buildup. Leave coverings loose to permit air circulation and to allow for periodic inspection.

The unit should be stored at least 3½ inches *(89 mm)* off the floor on wooden blocks covered with moisture proof paper or polyethylene sheathing. Aisles between parts and along all walls should be provided to permit air circulation and space for inspection.

Outdoor

Fans designed for outdoor applications may be stored outdoors, if absolutely necessary. Roads or aisles for portable cranes and hauling equipment are needed.

The fan should be placed on a level surface to prevent water from leaking into the fan. The fan should be elevated on an adequate number of wooden blocks so that it is above water and snow levels and has enough blocking to prevent it from settling into soft ground. Locate parts far enough apart to permit air circulation, sunlight and space for periodic inspection. To minimize water accumulation, place all fan parts on blocking supports so that rain water will run off.

Do not cover parts with plastic film or tarps as these cause condensation of moisture from the air passing through heating and cooling cycles.

Fan wheels should be blocked to prevent spinning caused by strong winds.

Inspection and Maintenance During Storage

While in storage, inspect fans once per month. Keep a record of inspection and maintenance performed.

If moisture or dirt accumulations are found on parts, the source should be located and eliminated. At each inspection, rotate the wheel by hand ten to fifteen revolutions to distribute lubricant in motor. If paint deterioration begins, consideration should be given to touch-up or repainting. Fans with special coatings may require special techniques for touch-up or repair.

Machined parts coated with rust preventive should be restored to good condition promptly if signs of rust occur. Immediately remove the original rust preventive coating with petroleum solvent and clean with lint-free cloths. Polish any remaining rust from surface with crocus cloth or fine emery paper and oil. Do not destroy the continuity of the surfaces. Thoroughly wipe clean with Tectyl® 506 (Ashland Inc.) or the equivalent. For hard to reach internal surfaces or for occasional use, consider using Tectyl® 511M Rust Preventive, WD-40® or the equivalent.

Removing From Storage

As fans are removed from storage to be installed in their final location, they should be protected and maintained in a similar fashion until the fan equipment goes into operation.

IMPORTANT

Installation, troubleshooting and parts replacement are to be performed only by qualified personnel. Consult and follow all applicable national, state and local codes. They will supercede this document.

Dimensional Data

Direct Drive

Model Size	Curb Cap	Damper	Roof Opening	*Approx. Weight
060, 070	17 *(432)*	8 *(203)*	10½ *(267)*	29 *(13)*
080, 090, 095	19 *(483)*	10 *(254)*	12½ *(318)*	40 *(18)*
099, 101, 121, 131	19 *(483)*	12 *(305)*	14½ *(368)*	67 *(30)*
141, 161	22 *(559)*	16 *(406)*	18½ *(470)*	90 *(41)*
180, 200, 200HP	30 *(762)*	18 *(457)*	20½ *(521)*	142 *(64)*
240, 240HP	34 *(864)*	24 *(610)*	26½ *(673)*	175 *(79)*
300, 300HP	40 *(1016)*	30 *(762)*	32½ *(826)*	313 *(142)*

- All dimensions are in inches *(millimeters)*. *Approximate weight shown in lbs. *(kg.)* is the largest cataloged open drip proof motor.
- "Curb Cap" is the inside dimension of the curb cap
- The roof curb should be 1½ in. *(38 mm)* less than the curb cap to allow for roofing and flashing.
- Roof opening is a square dimension.

Belt Drive

Model Size	Curb Cap	Shaft Bearings	Damper	Roof Opening	*Approx. Weight
099, 101, 101HP, 121, 131	19 *(483)*	¾ *(19)*	12 *(305)*	14½ *(368)*	66 *(30)*
141, 141HP, 161, 161HP	22 *(559)*	¾ *(19)*	16 *(406)*	18½ *(470)*	87 *(39)*
161XP	22 *(559)*	1 *(25)*	16 *(406)*	18½ *(470)*	87 *(39)*
180	30 *(762)*	¾ *(19)*	18 *(457)*	20½ *(521)*	126 *(57)*
180HP	30 *(762)*	1 *(25)*	18 *(457)*	20½ *(521)*	126 *(57)*
200	30 *(762)*	¾ *(19)*	18 *(457)*	20½ *(521)*	142 *(64)*
200HP	30 *(762)*	1 *(25)*	18 *(457)*	20½ *(521)*	142 *(64)*
220, 220HP, 240, 240HP, 240 XP	34 *(864)*	1 *(25)*	24 *(610)*	26½ *(673)*	175 *(79)*
300, 300HP, 300XP	40 *(1016)*	1 *(25)*	30 *(762)*	32½ *(826)*	313 *(142)*
360, 360HP, 360XP	46 *(1168)*	1¼ *(32)*	36 *(914)*	38½ *(978)*	440 *(200)*
420	52 *(1321)*	1¼ *(32)*	42 *(1067)*	44½ *(1130)*	578 *(262)*
480	58 *(1473)*	1½ *(38)*	48 *(1219)*	50½ *(1283)*	675 *(306)*

- All dimensions are in inches *(millimeters)*. *Approximate weight shown in lbs. *(kg.)* is the largest cataloged open drip proof motor.
- "Curb Cap" is the inside dimension of the curb cap
- The roof curb should be 1½ in. *(38 mm)* less than the curb cap to allow for roofing and flashing.
- Roof opening is a square dimension.

Installation

General Ventilation Installation

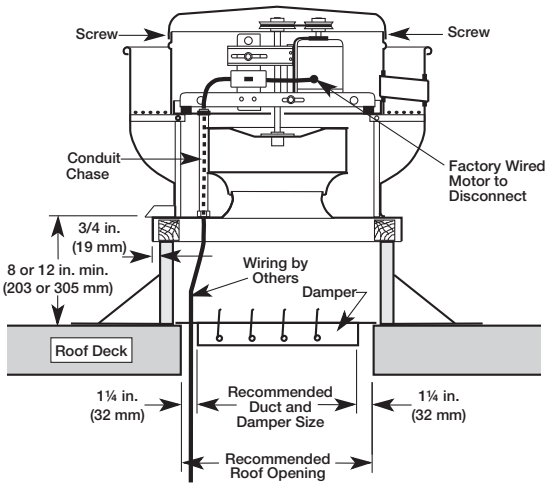

Figure 4 - Typical Roof Mounting Installation

1. On the roof surface, cut an appropriate sized hole and follow manufacturer's instructions on curb installation. Caulk and flash the curb to ensure a water tight seal.
2. If unit is equipped with a backdraft damper, it should be installed now.
3. Remove motor cover. Access to the motor compartment is accomplished by removing the screws as shown in Figure 3, page 2.

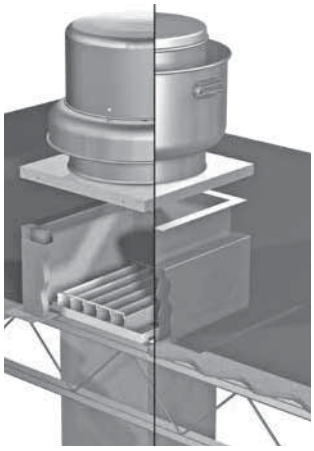

Figure 5 - Roof Curb Installation

4a. On **belt drive** fans, use the lifting lugs on the drive frame or bearing plate to lift and place the unit on top of roof curb. Refer to Figure 2, page 2.

4b. On **direct drive** fans, lift and place the unit on top of roof curb using hooks under the horizontal supports. Refer to Figure 1, page 2.

5. Secure fan to curb using a minimum of eight lag screws, metal screws or other suitable fasteners. Shims may be required depending upon curb installation and roofing material.
6. Verify power line wiring is de-energized before connecting fan motor to power source.
7. For commercial kitchen and UL Listed emergency smoke control applications, the electrical supply must enter the motor compartment through the breather tube. For other non-flammable applications, the electrical supply can be routed through the conduit chase between the curb cap and the bottom of the motor compartment.
8. Connect power supply wiring to the motor as indicated on the motor nameplate or terminal box cover. Check the power source for compatibility with the requirements of your equipment.
9. Check fan wheel for free rotation, recenter if necessary. Check setscrew(s) for tightness.
10. Check all fasteners for tightness.
11. Mount and wire safety disconnect switch under motor cover. Wire control switches at ground level, refer to Figure 6.

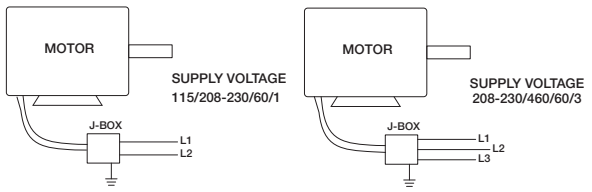

Figure 6 - Typical Wiring Diagram

12. Replace motor cover.

Vari-Green® Wiring

For Vari-Green wiring refer to the Vari-Green Motor and Controls Installation, Operation and Maintenance Manual for complete wiring and operation instructions.

Sidewall Mounting Installation

1. Cut an appropriate sized hole in the wall and follow manufacturer's instructions on curb installation. Mount the curb to the interior of the wall with a minimum of eight 3/8-inch fasteners around the flange. Caulk and flash the curb to ensure a watertight seal.
2. If unit is equipped with a backdraft damper, it should be installed now.
3. Lift the fan into place. Do NOT support the unit by the hoodband during installation.
4. Orient fan so the grease trough is downward and secure fan to curb using a minimum of eight lag screws, metal screws or other suitable fasteners.
5. Follow steps 6 through 12 of General Ventilation Installation instructions on page 4.

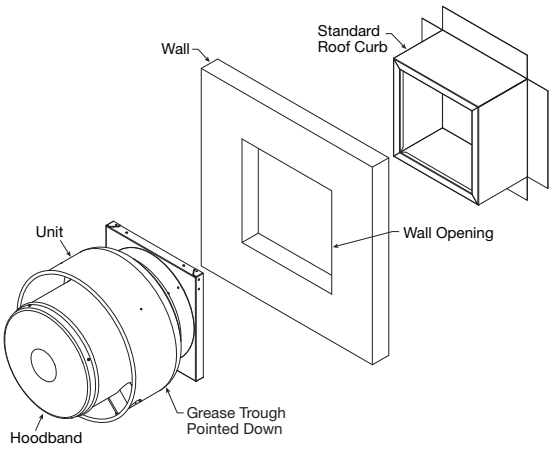

Figure 7 - Typical Sidewall Mounting Installation

Representation of UL Listed Power Ventilator label

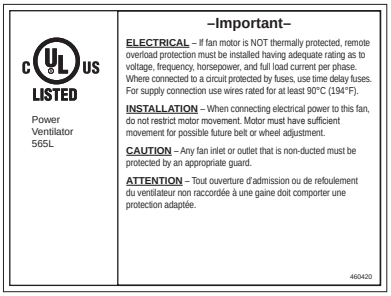

Commercial Kitchen Installation

Commercial kitchen installations must comply with NFPA 96. Check local and national codes for these installations and consult local code authorities for other specific requirements.

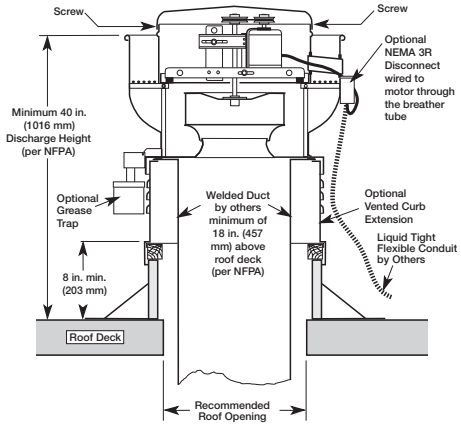

Figure 8
Typical Roof Mounting Installation

1. On the roof surface, cut an appropriate sized hole and follow manufacturer's instructions on curb installation. Caulk and flash the curb to ensure a watertight seal.
2. If unit is equipped with a backdraft damper. DO NOT install it.

Perform steps 3 - 12 of General Ventilation Installation.

IMPORTANT
The size of the duct must be equal to or larger than the inlet opening of the fan.
To comply with NFPA 96, the fan discharge must be a minimum of 40 in. *(1016 mm)* above the roof surface and a minimum of 10 ft. *(3048 mm)* from any building air intake.
Per NFPA 96, ductwork to an upblast discharge exhaust fan must be constructed of and supported by carbon steel not less than No. 6 MSG *(1.52 mm)* or stainless steel not less than No. 18 MSG *(1.21 mm)* in thickness. Duct must also extend a minimum of 18 in. *(457 mm)* above the roof surface.
Ensure that a minimum of 500 ft/min of air velocity through the duct is maintained per NFPA 96, clause 8.2.1.1, 2014 edition and UL 762, Issue #7, clause 6.2, October 14, 2013.
The following accessories may be required by NFPA 96 depending upon installation: Grease Trap, Hinge Kit or Hinged Base, Clean-Out Port, and Vented Curb.
Minimum duct velocities must be maintained in kitchen exhaust applications. If a speed controller is used, ensure compliance with all applicable codes.

Representation of UL Listed Power Ventilator Restaurant Exhaust Appliances label

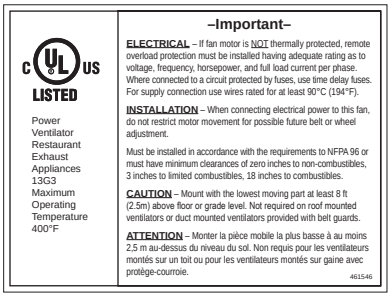

Grease Trap Installation

The polypropylene grease trap is designed to collect grease residue and avoid drainage onto roof surface. Follow all local codes, as well as the National Fire Protection Agency (NFPA) where applicable.

NFPA 96: Upblast fans shall have a drain directed to a readily accessible and visible grease receptacle not to exceed 1 gal. *(3.8L)*

Refer to Document 476370 - Grease Trap Installation, Operation and Maintenance Manual for parts list and specific installation instructions.

Grease Trap Maintenance

Regular inspection of grease trap is recommended. Depending on the amount of grease discharged through the fan, the grease trap should be cleaned regularly to ensure proper operation.

- Check grease absorber (if included) every month. Replace grease absorber after every cleaning and/ or as needed between cleanings.
- Replacement grease absorbers (P/N 476084) can be ordered from your local representative.

Hinge Installation

NFPA 96: Upblast exhaust fans shall be supplied with a hinge.

Refer to listed Installation, Operation and Maintenance Manuals for parts list and specific installation instructions:

Document 481937 - Sidewall Mount Hinge Kit
Document 481366 - Bracket Hinge Kit
Document 462865/462866 - Hinge Kit

UL Listed Emergency Smoke Control Installation

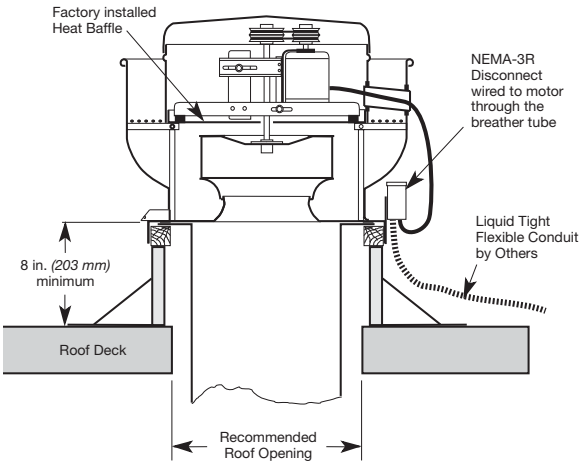

Figure 9 - Typical Roof Mounting Installation

Electrical Connection

For **belt drive** units in emergency smoke removal installations, the motor's amperage and voltage rating must be checked for compatibility to the supply voltage prior to final electrical connection. Also, the motor itself cannot have thermal overload protection.

The electrical supply must enter the motor compartment through the breather tube and the disconnect must be mounted outside the fan's motor compartment. Emergency smoke removal fans may also require an isolated power supply so that if power is cut to the building in the event of a fire, the fan will continue to operate.

Check the local and national electrical codes for emergency smoke removal fans. Consult local code authorities for your specific requirements.

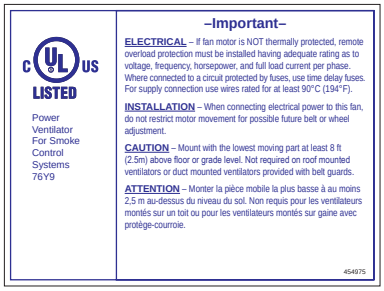

Representation of UL Listed Power Ventilator for Smoke Control Systems label

Mounting for Severe Duty Installation

IMPORTANT

Only qualified installers should perform this work. Manufacturer assumes no liability for damages resulting from installation.

Installation instructions for seismic ratings are only recommendations. Final design must be determined by Structural Engineer of Record (SEOR) including requirements for curb construction, mounting of unit to curb and mounting of curb to structure.

Fan to Curb Mounting: 5/16-inch *(7.9 mm)* self-drilling fasteners are to be installed on each side of fan with one fastener 4-inches *(102 mm)* from each edge and one fastener in the center, Figure 10. Fasteners are to be equally spaced.

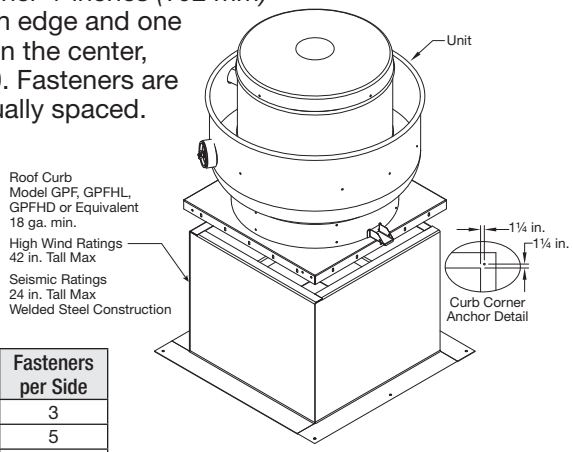

Fan Size	Fasteners per Side
≤ 161	3
180 to 240	5
≥ 300	9

Figure 10 - Fan to Curb Mounting

Optional Hinged Base Mounting: For installations that include the optional hinged base accessory, the fan must be secured to the hinged base and curb using the correct number of fasteners as shown in the "Fan to Curb Mounting" section. All fasteners must be installed through the curb cap of the fan, the hinged base, and the curb. All fasteners must be reinstalled after each time the fan is hinged open, see Figure 11.

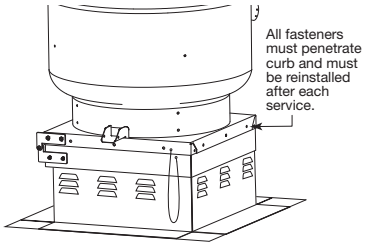

Figure 11 - Fasteners

Curb to Deck Mounting: Fasteners need to be located on all four sides of the curb, Figures 12a and 12b.

Figure 12a

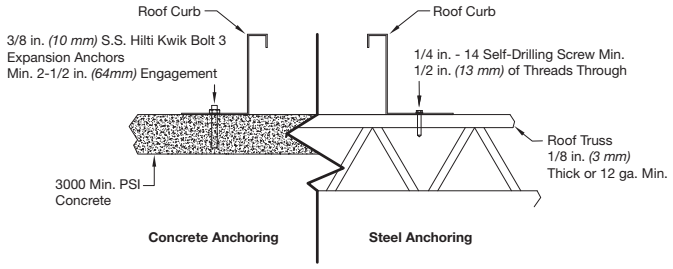

Figure 12b

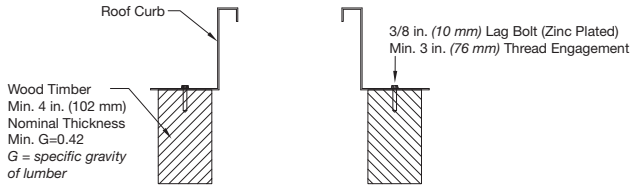

Timber Anchoring

	High Wind Ratings				Seismic Ratings		
			Fasteners			Fasteners	
	Fan Size	Curb Cap Size inches *(millimeters)*	Per Side	Total	Fan Size	Per Side	Total
Steel	≤ 161	17x17 to 22x22 *(432x432 to 559x559 mm)*	3	12	060-240	2	8
	> 161	26x26 to 40x40 *(660x660 to 1016x1016 mm)*	4	16	300-360	3	12
					420-480	5	20
Concrete	≤ 161	17x17 to 22x22 *(432x432 to 559x559 mm)*	3	12	060-240	2	8
	> 161	26x26 to 40x40 *(660x660 to 1016x1016 mm)*	3	12	300-360	3	12
					420-480	5	20
Wood	≤ 161	17x17 to 22x22 *(432x432 to 559x559 mm)*	3	12	060-240	2	8
	> 161	26x26 to 40x40 *(660x660 to 1016x1016 mm)*	4	16	300-360	3	12
					420-480	5	20

All dimensions are in inches *(millimeters)*.

Pre-Starting Checks

1. Check all fasteners and setscrews for tightness. The wheel should rotate freely and be aligned as shown in Figure 13.

Model Type		Model Size	G - Overlap inch *(mm)*	H - Gap inch *(mm)*
Direct	Belt			
X	–	060-095	–	3/32 *(2)*
X	X	099-161	1/4 *(6)*	–
X	X	180-300	1/2 *(13)*	–
–	X	360-480	3/4 *(19)*	–

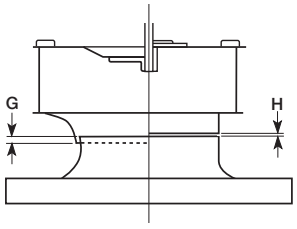

Figure 13
Wheel Overlap and Gap Dimension

2. Wheel position is preset and the unit is test run at the factory. Movement may occur during shipment and realignment may be necessary.

   Centering the wheel can be accomplished by loosening the bolts on the support pan and moving support pan until wheel is properly aligned. For units with drive frame mounting, loosen the bolts holding the drive frame to the vibration isolators and reposition the drive frame if additional movement is needed for wheel alignment.

   Wheel and inlet cone overlap can be adjusted by loosening the setscrews in the wheel hub and moving the wheel to the desired position. For direct and belt drive models with wheel hubs and shaft pulleys utilizing tapered bushing interface, reference page 9 for tapered bushing removal and move the wheel to the desired position.

3. Check wheel rotation (viewing from the shaft side) by momentarily energizing the unit. Rotation should be clockwise as shown in Figure 14 and correspond to the rotation decal on the unit. If wheel rotation is incorrect, reverse two of the wiring leads or check motor wiring for single phase. Fan RPM should be checked and verified with a tachometer.

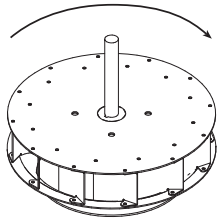

Figure 14

WARNING

Correct direction of wheel rotation is critical. Reversed rotation will result in poor air performance, motor overloading and possible motor burnout.

AVERTISSEMENT

La turbine doit impérativement tourner dans le bon sens. Une rotation en sens inverse entraînerait de mauvaises performances de soufflage, une surcharge du moteur voire un grillage du moteur.

Belt Drive Pre-Starting Belt Tension Checks

4. Always loosen tension enough to install belts without stretching. Do not force belt(s) *see* Figure 15. Forcing belts will break the cords and cause belt failure.

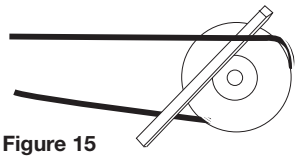

Figure 15

5. For units with two groove pulleys, adjust so the tension is equal in both belts.
6. If adjustments are made, it is very important to check the pulleys for proper alignment. Misaligned pulleys lead to excessive belt wear, vibration, noise and power loss, see Figure 16.

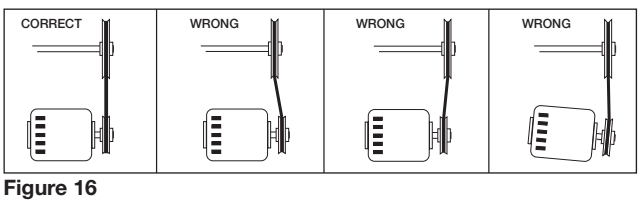

Figure 16

7. Belt tension can be adjusted by loosening four fasteners on the drive frame, see Figure 17. The motor plate slides on the slotted adjusting arms and drive frame angles in the same manner.

   Four (4) fasteners in total.

   Identical fasteners on opposing side must also be loosened.

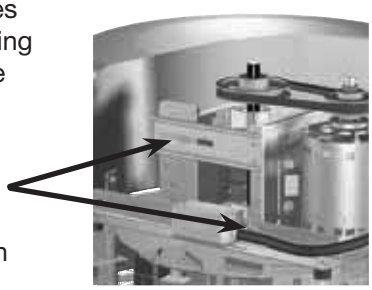

Figure 17

8a. **Sizes 099-161:** Belts should be tensioned just enough to prevent slippage at full load. Belts should have a slight bow on the slack side while running at full load; see Figure 18a.

8b. **Sizes 180-480:** Belt tension should be adjusted to allow 1/64 in. *(0.397 mm)* of deflection per inch of belt span. For example, a 15 in. *(381 mm)* belt span should have 15/64 in. *(5.95 mm)* (or about 1/4 in. *(6 mm)*) of deflection with moderate thumb pressure at mid-point between pulleys, see Figure 18b.

Figure 18a

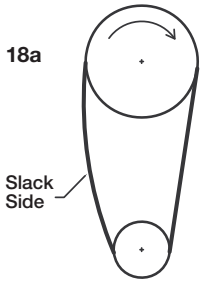

Figure 18b

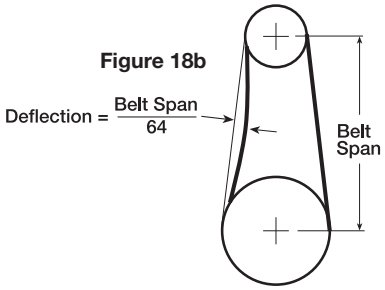

9. The adjustable motor pulley is factory set for the RPM specified. Speed can be increased by closing or decreased by opening the adjustable motor pulley.
10. Any increase in speed represents a substantial increase in the horsepower required by the unit.
11. Motor amperage should always be checked to avoid serious damage to the motor when speed is varied.

IMPORTANT
The fan has been checked for mechanical noises at the factory prior to shipment. If mechanical noise should develop, suggested corrective actions are offered in the Troubleshooting section.

IMPORTANT
Over tightening belts will cause excessive bearing wear and noise. Too little tension will cause slippage at startup and uneven wear.

Operation

1. Before starting up or operating fan, check all fasteners for tightness. In particular, check the setscrews in the wheel hub (or the tapered bushing and pulleys if applicable).
2. While in the OFF position or before connecting the fan to power, turn the fan wheel by hand to be sure it is not striking the venturi or any obstacle.
3. Start the fan and shut it off immediately to check rotation of the wheel with directional arrow in the motor compartment, reference Figure 14.
4. When the fan is started, observe the operation and check for any unusual noises.
5. With the system in full operation and all ductwork attached, measure current input to the motor and compare with the nameplate rating to determine if the motor is operating under safe load conditions.
6. Keep inlets and approaches to fan clean and free from obstruction.

IMPORTANT
Adjust (tighten) belt tension after the first 24-48 hours of operation.

Inspection

Inspection of the fan should be conducted at the first 30 minute and 24 hour intervals of satisfactory operation.

30 Minute Interval: Inspect bolts, setscrews and motor mounting bolts. Adjust and tighten as necessary.

24 Hour Interval: Check all internal components. On belt drive unit only, inspect belt alignment and tension. Adjust and tighten as necessary.

Maintenance

DANGER
Disconnect and secure to the “off” position all electrical power to the fan prior to inspection or servicing. Failure to comply with this safety precaution could result in serious injury or death.

WARNING
This unit should be made non-functional when cleaning the wheel or housing (fuses removed, disconnect locked off).

DANGER
Pour écarter les risques de blessure grave ou de mort, débrancher et verrouiller l’alimentation électrique en position « Arrêt » avant tout contrôle ou entretien.

AVERTISSEMENT
L’appareil doit être rendu non opérationnel lors du nettoyage de la turbine ou du caisson (fusibles retirés, sectionneur verrouillé).

IMPORTANT

Uneven cleaning of the wheel will produce an out of balance condition that will cause vibration in the fan.

Installation and maintenance are to be performed only by qualified personnel who are familiar with local codes and regulations and who are experienced with this type of equipment.

Motor maintenance is generally limited to cleaning and lubrication (where applicable). Cleaning should be limited to exterior surfaces only. Removing dust buildup on motor housing ensures proper motor cooling.

Greasing of motors is only intended when fittings are provided. Many fractional horsepower motors are permanently lubricated and should not be lubricated after installation. Motors supplied with grease fittings should be greased in accordance with manufacturer's recommendations. Where motor temperatures do not exceed 104ºF *(40ºC)*, the grease should be replaced after 2,000 hours of running time as a general rule.

Wheels require very little attention when moving clean air. Occasionally, oil and dust may accumulate causing imbalance. When this occurs, the wheel and housing should be cleaned to ensure smooth and safe operation.

All fasteners should be checked for tightness each time maintenance checks are performed prior to restarting unit.

- When installing fans for restaurant exhaust applications follow NFPA 96 for cleaning fans.
- Grease containers must be emptied at regular intervals to prevent overflow.

A proper maintenance program will help these units deliver years of dependable service.

Tapered Bushing Hub Installation and Removal

For wheel hubs and shaft pulleys utilizing a tapered bushing interface, follow this procedure for installation and removal. There are two possible set ups for the tapered bushing, both have the same procedure, but orientation of the hub varies.

Tapered Bushing Removal:

1. If present, loosen the setscrew holding the bushing and shaft key in place.
2. Loosen and remove the socket head cap screws which fasten the bushing to the hub as shown in the section views and examples of Figures 19-22.
3. **Standard Mounting:** Take the two socket head cap screws that were removed and install them into the visibly threaded holes on the wheel hub.
   Reverse Mounting: Install the two socket head cap screws into the visibly threaded holes of the bushing flange.
4. Once both socket head cap screws are installed, tighten them an eighth of a turn at a time, alternating between the two until the hub comes loose from the bushing.

Standard Mounting	Reverse Mounting
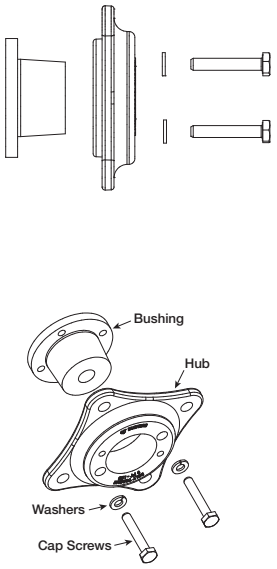	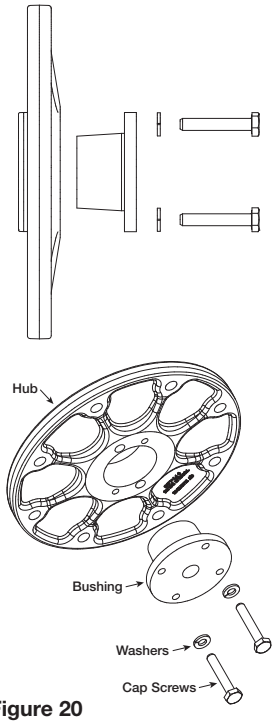
Figure 19	**Figure 20**
	
Figure 21 Standard Bushing Orientation	**Figure 22** Reverse Bushing Orientation

Bushing Installation

1. Clean all surfaces of hub and bushing to remove any oil or residue present and do not use any lubricant to install bushing into the hub. For both standard and reverse mounting styles, the socket head cap screws are adjustable from the inlet of the fan.
2. **Standard Mounting:** Slide the bushing and shaft key onto the fan shaft followed by the wheel and hub assembly. If present, use the keyway setscrew to hold the shaft key and bushing in place but DO NOT overtighten as this can damage the bushing. Align the unthreaded holes of the hub with the threaded holes of the tapered bushing.
   Reverse Mounting: Slide the wheel and hub assembly onto the fan shaft followed by the bushing and shaft key. If present, use the keyway setscrew to hold the shaft key and bushing in place but DO NOT overtighten as this can damage the bushing. Align the unthreaded holes of the tapered bushing with the threaded holes of the hub.

3. Install the two bushing socket head cap screws into the aligned holes by hand (or without excessive torque) until the heads of the socket head cap screws are seated against the mating surface.
4. Adjust the height of the wheel in the fan relative to the inlet venturi then tighten the two socket head cap screws an eighth turn at a time in an alternating fashion and to a torque of 10 ft-lbs.

Belt and Bearing Maintenance

1. Belts tend to stretch after a period of time. They should be checked periodically for wear and tightness. When replacing belts, use the same type as supplied with the unit.
2. Matched belts should always be used on units with multi-groove pulleys.
3. For belt replacement, loosen tensioning device enough to allow removal of the belt by hand.
4. Once installed, adjust belts as shown in "Pre-Starting Checks."
5. To ensure tightness, check pulley setscrews. Proper keys must be in keyways.
6. Fan RPM should not be readjusted. Only use pulleys of identical size and type when replacing pulleys.
7. Shaft bearings can be classified in two groups: relubricating and non-relubricating. All non-relubricating bearings on belt drive fans are factory lubricated and require no further lubrication under normal use (between -20º to 180ºF *(-29º to 82ºC)* in a relatively clean environment).
8. On belt drive fans, the standard cast pillow block bearings are factory lubricated and are provided with external grease fittings. Annual lubrication is recommended, or more frequently if needed, see Table 1. Do not over-grease. Use only one or two shots of lubricant with a hand gun. Maximum hand gun rating is 40 psi. Rotate bearings during lubrication where good safety practice permits. Caution should be employed to prevent over packing or contamination.
9. Units installed in hot, humid or dirty locations should be equipped with special bearings. These bearings will require frequent lubrication. Caution should be employed to prevent over packing or contamination.
10. Grease fittings should be wiped clean. The unit should be in operation while lubricating bearings. Extreme care should be used around moving parts.
11. Grease should be pumped in very slowly until a slight bead forms around the seal. A high grade lithium base grease should be used (see Table 2).
12. During the first few months of operation, check bearing set screws periodically to ensure tightness.
13. If unit is to be left idle for an extended period, remove belts and store in a cool, dry place to avoid premature belt failure.

Recommended Bearing Lubrication Frequency in Months

NOTE

If unusual environment conditions exist (extreme temperature, moisture or contaminants) more frequent lubrication is required.

A good quality lithium base grease, conforming to NLGI Grade 2 consistency, such as those listed in Table 2 may be used.

Table 1: Suggested Fan Bearing Lubrication Intervals

Interval (months)	Type of Service
1 to 3	Heavy duty in dirty, dusty locations; high ambient temperatures; moisture laden atmosphere; vibration.
3 to 6	12 to 24 hours per day, heavy duty, or if moisture is present
6 to 12	8 to 16 hours per day in clean, relatively dry atmosphere
12 to 18	Infrequent operation or light duty in clean atmosphere

Table 2: Grease Manufacturers

Manufacturer	Grease (NLGI #2)
U.S. Electric Motors	Grease No. 83343
Chevron U.S.A. Inc	Chevron SRI Grease #2
Mobil Oil Corporation	Mobilith
	Mobil 532
Texaco, Inc.	Premium BRB #2
	Texaco Multifak #2
Amoco Oil Co.	Rykon Premium #2
Exxon	Unirex N2
Shell	B Shell Alvania #2

Parts List

Each fan bears a manufacturer's nameplate with model number and serial number embossed. This information will assist the local representative and the factory in providing service and replacement parts. Before taking any corrective action, make certain unit is not capable of operation during repairs.

NOTE

For replacement, the windband, vertical supports, drain trough and curb cap/venturi come as one complete assembly.

CAUTION

A fan manufactured with an explosion resistant motor does not certify the entire unit to be explosion proof. Refer to UL Listing mark for the fans approved usage.

CAUTION

La présence d'un moteur antidéflagrant sur un ventilateur ne garantit pas que tout l'appareil est antidéflagrant. Pour connaître les emplois autorisés de l'appareil, voir son marquage de conformité UL.

Direct Drive



Belt Drive

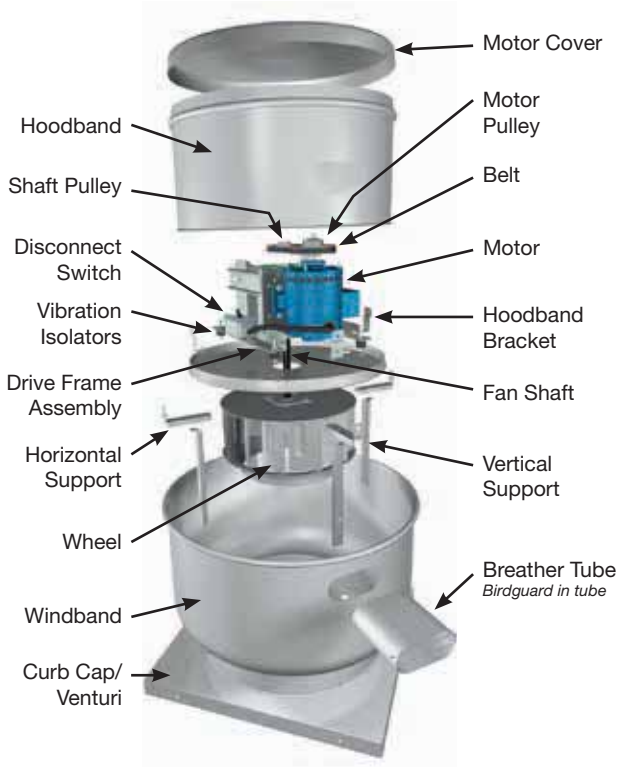

Fan Inlet Connections

In order to ensure proper fan performance, caution must be exercised in fan placement and connection to the ventilation system. Obstructions, transitions, poorly designed elbows, improperly selected dampers, etc, can cause reduced performance, excessive noise and increased mechanical stress. For performance to be as published, the system must provide uniform and stable airflow into the fan.

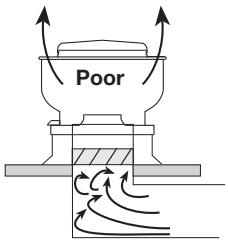

Dampers must open fully. Use motorized dampers in low airflow applications to reduce losses.

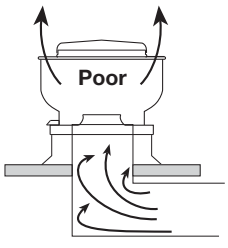

Avoid sharp turns or entrance conditions which cause uneven flow. Use turning vanes in elbows to reduce adverse effects.

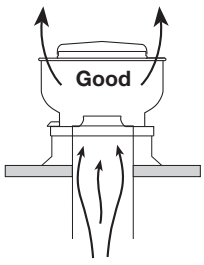

Provide uniform airflow at fan inlet to ensure optimum performance.

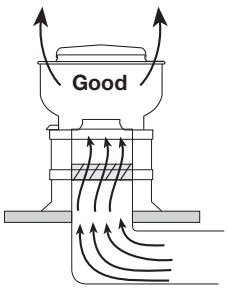

Provide uniform airflow at fan inlet and through the damper to ensure optimum performance. Curb cap should be three wheel diameters from the radius. Use turning vanes in duct when possible.

Troubleshooting

WARNING

Before taking any corrective action, make certain unit is not capable of operation during repairs.

AVERTISSEMENT

Avant d'entreprendre toute action corrective, s'assurer que l'appareil ne pourra pas fonctionner durant les réparations.

PROBLEM	CAUSE	CORRECTIVE ACTION
Excessive noise or vibration	Wheel rubbing inlet	Adjust wheel and/or inlet cone. Tighten wheel hub or bearing collars on shaft.
	V-belt drive	Tighten pulleys on motor/fan shaft. Adjust belt tension. Align pulleys properly, see page 7, Figures 15 and 16. Replace worn belts or pulleys.
	Bearings	Replace defective bearing(s). Lubricate bearings. Tighten collars and fasteners.
	Wheel unbalance	Clean all dirt off wheel. Check wheel balance, rebalance in place if necessary.
	Belts too tight or too loose	Adjust tension, see page 8, Figures 18a and 18b.
	Wheel improperly aligned and rubbing	Center wheel on inlet, see page 7, Figure 13.
	Loose drive or motor pulleys	Align and tighten. See "Pre-Starting Checks", pages 7 and 8.
	Foreign objects in wheel or housing	Remove objects, check for damage or unbalance.
	Fan base not securely anchored	Secure properly.
	Motor hood loose and rattling	Tighten fasteners to secure the motor hood.
	Defective or loose motor bearings	Replace motor with same frame size, RPM-HP
High horsepower	Fan	Check rotation of wheel, see page 7, Figure 14. Reduce fan speed.
	Duct system	Resize ductwork. Check proper operation of face and bypass dampers. Check filters and access doors.
Fan does not operate	Electrical supply	Check fuses/circuit breakers. Check for switches off. Check for correct supply voltage.
	Drive	Check for broken belts. Tighten loose pulleys or belts.
	Motor	Ensure motor is correct horsepower and not tripping overload protector.
Motor overloads or overheats	Lubrication	Check for excessive or insufficient grease in the bearing.
	Mechanical	Replace damaged bearing. Relieve excessive belt tension. Align bearings. Check for bent shaft.
	Belt slippage	Adjust tension or replace bad belts, see pages 7 and 8.
	Over/Under line voltage	Contact power company.
	Incorrect wheel rotation	Check motor wiring, see page 4, Figure 6. Confirm wheel rotation, see page 7, Figure 14.
	Wheel RPM too high	Check drives or slow down fan by opening variable pitch pulley on motor shaft.
	Undersized motor	Check motor ratings with catalog speed and air capacity chart.
	Motor wired incorrectly	Check motor wiring to wiring diagram located on fan motor.
Reduced airflow	System resistance too high	Check system: Proper operation of backdraft or control dampers, obstruction in ductwork, clean dirty filters.
	Unit running backwards	Correct as shown see page 7, Figure 14.
	Excessive dirt buildup on wheels	Clean wheel, see page 7.
	Improper wheel alignment	Center wheel on inlet, see "Pre-Starting Checks".
	Dampers closed	Inspect and repair.
	Blocked duct/clogged filter	Clean or replace.
	Belt slippage	Replace and adjust tension.
	Speed too slow	Check for correct drives.

Our Commitment

As a result of our commitment to continuous improvement, Greenheck reserves the right to change specifications without notice.

Product warranties can be found online at Greenheck.com, either on the specific product page or in the literature section of the website at Greenheck.com/Resources/Library/Literature.

Greenheck's Centrifugal Upblast and Sidewall Exhaust catalog provides additional information describing the equipment, fan performance, available accessories, and specification data.

AMCA Publication 410-96, Safety Practices for Users and Installers of Industrial and Commercial Fans, provides additional safety information. This publication can be obtained from AMCA International, Inc. at www.amca.org.

GREENHECK
Building Value in Air.

Phone: 715.359.6171 • Fax: 715.355.2399 • Parts : 800.355.5354 • E-mail: gfcinfo@greenheck.com • Website: www.greenheck.com

 Copyright 2018 © Greenheck Fan Corporation