Document 475290
Installation Instruction for 316SS Extension Pin, Extension Pin Kit, and Manual Quadrants for VCD-40

Installation, Operation and Maintenance Manual

Please read and save these instructions for future reference. Read carefully before attempting to assemble, install, operate or maintain the product described. Protect yourself and others by observing all safety information. Failure to comply with these instructions will result in voiding of the product warranty and may result in personal injury and/or property damage.

For Dampers Installed in Ducts
Extended control shaft is installed from outside of duct after damper is installed. Install as shown in this document.

Tools Required
5⁄16 in. Hex Nut Drive
3⁄8 in. Electric Drill
½ in. Open End Wrench

Extension Pin with Clip

Part Number 846032 316SS Extension Pin with Clip			
Number	**Qty**	**Description**	**Part Number**
1	1	Extended Control Shaft	463921
2	1	Retaining Clip	454204

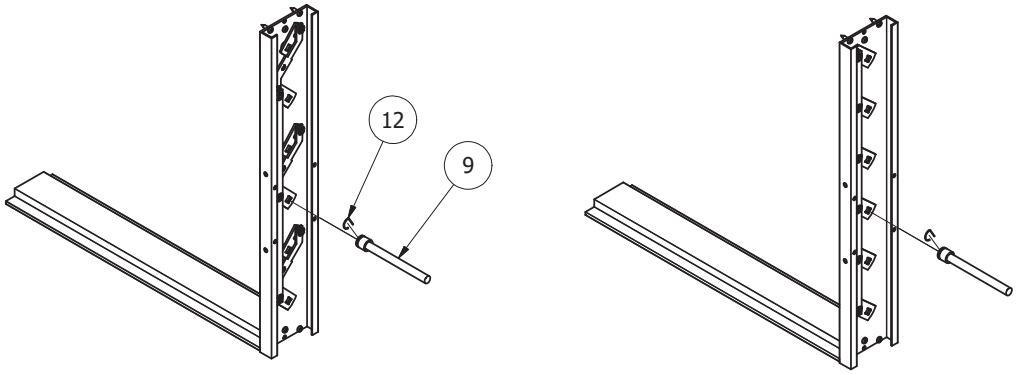

CROSSOVER BLADE AXLE
— DO NOT ATTACH CONTROL SHAFT HERE!

Before Installing Damper in the Duct

1. If the damper has more than one blade, determine which blade axle will be driven by the extended control shaft. Always attach extended control shaft to a blade axle which is directly connected to the main linkage tiebar. DO NOT attach extended control shaft to a crossover blade axle.
2. Cut hole approximately 1 in. (25 mm) diameter in duct where the damper drive blade axle will be located. Hole must provide clearance for enlarged portion of extended control shaft.

After Damper is Installed in the Duct

1. Push extended control shaft through the hole in the duct and onto the drive blade axle. Retainer clip should “click” into groove on the drive blade axle and hold the shaft into place.

   Standard control shaft location in the third blade from the bottom on dampers with three or more blades. Control shaft location is the first blade from the bottom on dampers with one or two blades.

Extension Pin Kit

Part Number 913909 ½ in. 316SS Extension Pin Kit			
Number	**Qty**	**Description**	**Part Number**
1	1	Standoff Bracket	913518
2	4	¼-20 x ½ Stud	417270
3	4	¼-20 Nut	417305
4	1	316SS Extension Pin	463921
5	1	Retaining Clip 316SS	454204

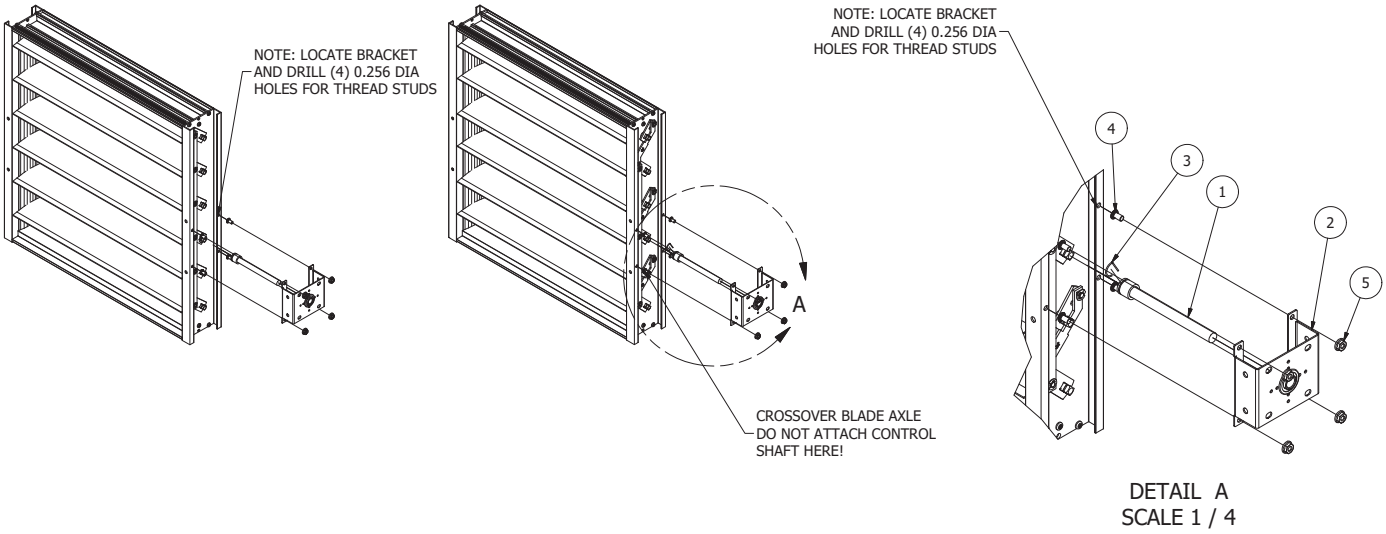

Before Installing Damper in the Duct

1. If the damper has more than one blade, determine which blade axle will be driven by the extended control shaft. Always attach extended control shaft to a blade axle which is directly connected to the main linkage tiebar. DO NOT attach extended control shaft to a crossover blade axle.
2. Cut hole approximately 1 in. (25 mm) diameter in duct where the damper drive blade axle will be located. Hole must provide clearance for enlarged portion of the extended control shaft.

After Damper is Installed in the Duct

1. Push extended control shaft through the hole in the duct and onto the drive blade axle. Retainer clip should “click” into the groove on the drive blade axle and hold the shaft into place.

   Standard control shaft location is the third blade from the bottom on dampers with three or more blades. Control shaft location is the first blade from the bottom on dampers with one or two blades.
2. Install the stand off bracket with bearing over the extended control shaft and screw bracket to the duct. Make sure screws (provided by others) do not interfere with damper linkage or blade movement.

Manual Quadrant Kits with Extension Pin

Part Number 913911 ½ in. 316SS Extension Pin Kit with Manual Quadrant			
Number	**Qty**	**Description**	**Part Number**
1	1	Standoff Bracket	913518
2	1	Extension Pin	463921
3	1	Retaining Clip	454204
4	4	¼-20 Nut	417305
5	4	¼-20 x ½ Stud	417270
6	1	½ in. dia. Manual Quadrant	464699
7	2	⅛ in. Rivet	416308
8	1	Open/Closed Labels	452690

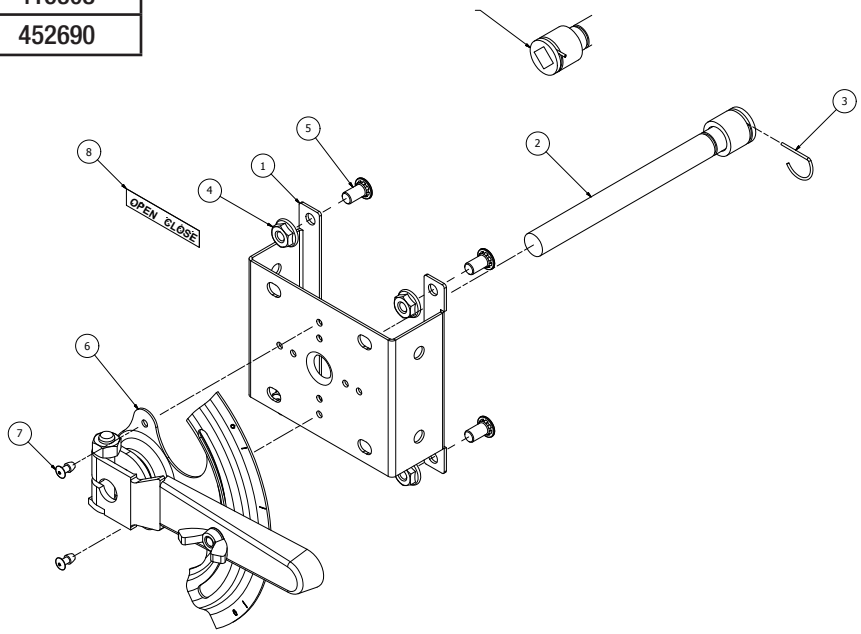

Part Number 862239 316SS Extension Pin Kit with 1 in. Manual Quadrant			
Number	**Qty**	**Description**	**Part Number**
1	1	Manual Quadrant Bracket	687407
2	1	Manual Quadrant Lever Arm	827734
3	1	⅜ - 16 x 1¼ 316SS Bolt	415780
4	1	Flat Washer	415401
5	1	⅜ - 16 x 2½ 316SS Bolt	415944
6	1	⅜ in. 316SS Locking Washer	415810
7	1	⅜ - 16 316SS Nut	415799
8	1	Open/Closed Labels	452690
9	1	Wing Nut	416132
10	1	Standoff Bracket	687405
11	8	¼ - 20 x ½ 316SS Bolt	415868
14	8	¼ - 20 316SS nut	415810

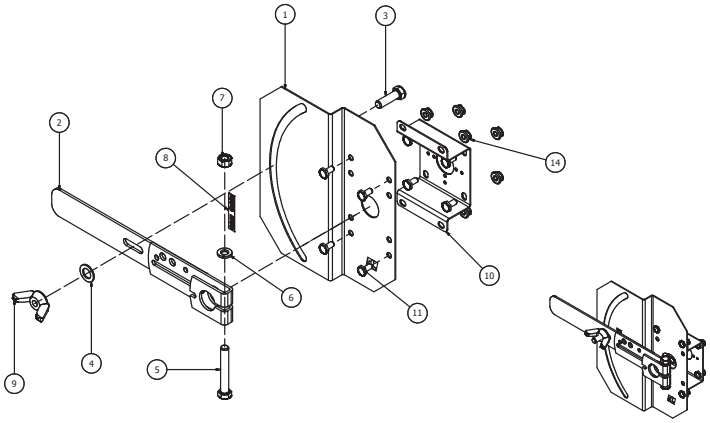

Manual Quadrant Kits with Extension Pin

Non-Jackshafted Dampers

Control damper should be mounted in the duct and the shaft extension mounted onto the correct blade of the damper before continuing with these instructions.

After Extended Shaft is Installed

1. The jackshaft is either ½ in. or 1 in. diameter depending upon the size of the damper. The manual quadrant kit for the ½ in. diameter jackshaft is part number 865086 and the manual quadrant kit for a 1 in. diameter jackshaft is part number 862239.
2. With the damper either fully open or closed, lock the manual quadrant to the jackshaft so the manual quadrants can move the damper between open and closed. Note: Tighten down the bolt on the manual quadrant to 250 in. lb. of torque. Apply “OPEN” and “CLOSED” labels if the damper movement is opposite to what is engraved on the manual quadrant.
3. Set the damper to the desired position and tighten the wing nut on the manual quadrant to hold the damper in place.

Jackshafted Dampers

1. The jackshaft is either ½ in. or 1 in. diameter depending upon the size of the damper. The manual quadrant kit for the ½ in. diameter jackshaft is part number 865086 and the manual quadrant kit for a 1 in. diameter jackshaft is part number 862239.
2. With the damper either fully open or closed, lock the manual quadrant to the jackshaft so the manual quadrant can move the damper between open and closed. Note: Tighten down the bolt on the manual quadrant to 250 in. lb. of torque. Apply “OPEN” and “CLOSED” labels if the damper movement is opposite to that engraved in the manual quadrant.
3. Set the damper to the desired position and tighten the wing nut on the manual quadrant to hold the damper in place.

Our Commitment

As a result of our commitment to continuous improvement, Greenheck reserves the right to change specifications without notice.

Product warranties can be found online at Greenheck.com, either on the specific product page or in the literature section of the website at Greenheck.com/Resources/Library/Literature.

GREENHECK®
Building Value in Air.

Phone: 715.359.6171 • Fax: 715.355.2399 • Parts: 800.355.5354 • E-mail: gfcinfo@greenheck.com • Website: www.greenheck.com

 Copyright 2024 © Greenheck Fan Corporation