CRD-1WJ

Ceiling Radiation Damper for Wood Joist Applications

Application

The CRD-1WJ is a UL classified ceiling radiation damper for installation in wood joist construction with ratings up to an one hour. The CRD-1WJ provides the ceiling radiation damper installed in an insulated steel enclosure. The damper is positioned in the enclosure to accomodate 1½ in. (38mm) grille depth.

Damper is actual size. Shown with optional factory supplied plenum.

Construction

Construction	Standard	Optional
Frame Material	Galvanized steel*	-
Blade Material	Galvanized steel*	-
Blade Insulation	Ceramic Fiber	-
Closure Device	Fusible link	Volume controller
Fusible Link	165°F (74°C)	212°F (100°C)
Enclosure Insulation	Ceramic fiber blanket	-
Inlet Shape	Round	
Inlet Type	R	C, O
Factory Supplied Plenum	None	Steel
Sealed Plenum Box	No	Yes
* in gauges required by UL listing R13446		

Insulation provided by Greenheck.

See complete marking on product.

UL 555C Classification R13446

Model CRD-1WJ meets the requirements for ceiling radiation dampers established by:

- National Fire Protection Association NFPA Standards, 90A and 101
- International Building Codes (IBC)
- CSFM Califonial State Fire Marshal Fire Damper Listing (#3225-0981:0101)

Options

- Clean wrap
- Extra fusible links

UL Fire Resistance Directory Approved Ceiling Design Number:

L501, L502, L503, L506, L507, L508, L512, L513, L514, L515, L516, L517, L519, L522, L523, L533, L537, and L545

Click on design number to open UL Fire Resistance Directory

Other proprietary UL design numbers may be similar. Approval by AHJ or local code is required to use a Greenheck design when not specified.

GA File No.	UL Design No.
FC5525	L502
FC 5526	L513
FC5527	L515
GA = Gypsum Association Fire Resistance Manual	

Wood Joist System

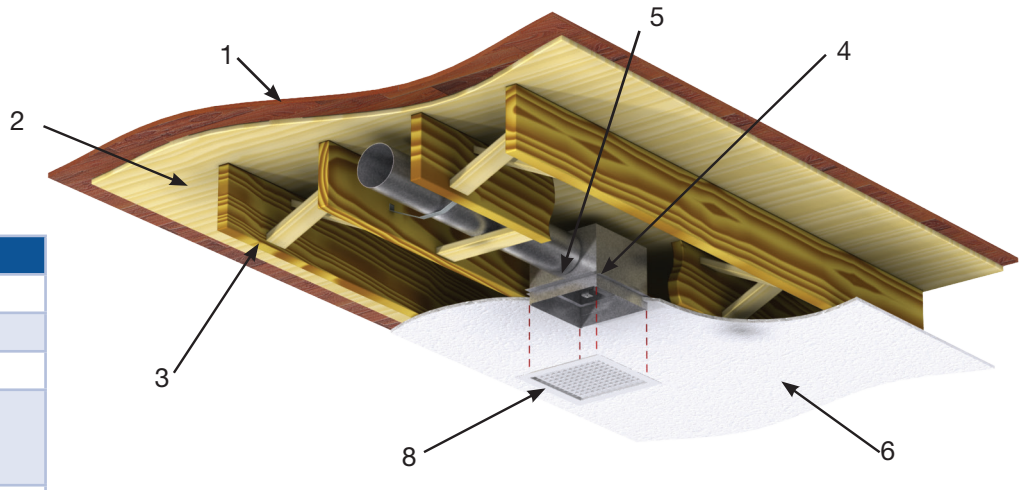

Number	Description
1	Flooring Systems
2	Wood Joists
3	Cross Bridging
4	CRD-1WJ Assembly (damper, steel enclosure, & insulation)
5	Mounting angle - not supplied
6	Gypsum board (see UL Fire Resistance Directory for type)
7	Finishing System (not shown)
8	Grille - not supplied

Document Links

INSTALLATION

CATALOG

DAMPER SELECTION GUIDE

SPECIFICATIONS

WARRANTY

Volume Controller Option

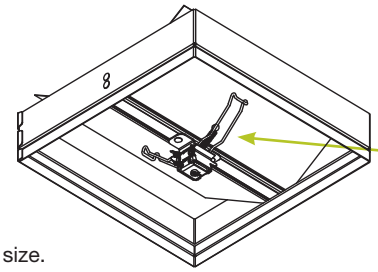

Damper is actual size.

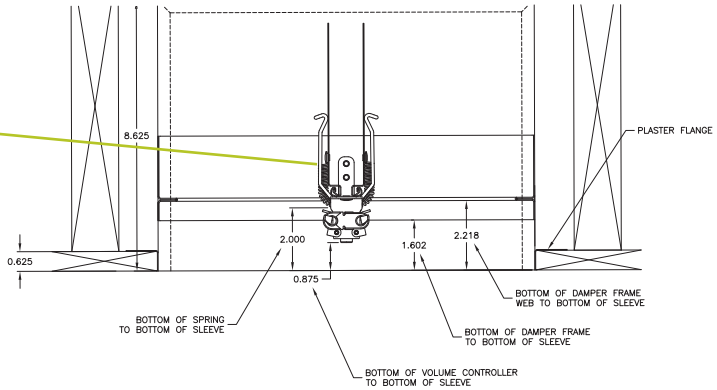

Inlet

Inlet Size Limitations		
W X H in. (mm)	**Minimum**	**Maximum**
R*	3 (76)	6 152)
* Diameter Inlet size is limited by the damper height specified.		

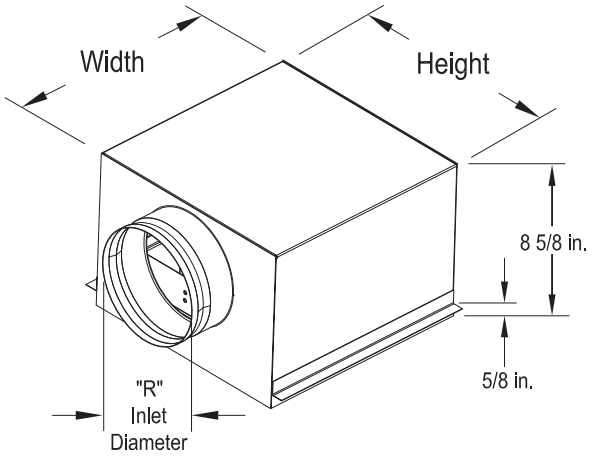

R inlet is undersized ⅛ in. (3.2mm).

GREENHECK
P.O. Box 410 • Schofield, WI 54476-0410 • 715.359.6171 • greenheck.com

Copyright © 2024 Greenheck Fan Corporation

Greenheck Fan Corporation reserves the right to make product changes without notice.