VCD-40

4 Inch Airfoil Blade Control Damper

Application

The VCD-40 is a low leakage control damper with extruded aluminum airfoil blades. Blades are completely contained within the frame allowing the damper to be directly mounted to a louver, filter frame, or similar application with no blade interference.

VCD-40 is IECC (International Energy Conservation Code) compliant with a leakage rating of 3 cfm/ft^2 at 1 in. wg (55cmh/m^2 at .25 kPa) or less.

Damper Ratings

Velocity
Up to 6000 fpm (30.5 m/s)
Pressure
Up to 6 in. wg (1.5 kPa) - pressure differential
Leakage
Class 1A at 1in. wg (0.25 kPa)
Temperature
-40°F to 250°F (-40°C to 121°C). Consult factory for higher temperature

Construction

	Standard	Optional
Frame Material	Aluminum	-
Frame Material Thickness	.125 in. (3.2 mm) minimum wall thickness	-
Frame Type	4 in. x 1 in. (102 mm x 25 mm) hat channel	Single flange, Reversed flange
Blade Material	Extruded Aluminum (6063T5)	-
Blade Type	Airfoil	-
Blade Action	Opposed	Parallel
Blade Seals	TPE	Silicone
Linkage	Plated steel out of airstream, concealed in jamb	316SS
Axle Bearings	Synthetic	316SS
Axle Material	½ in. dia. Plated steel	316SS
Jamb Seal	Stainless Steel	-
Paint Finishes	Mill Finish	Baked Enamel, Hi Pro Polyester, Industrial Epoxy Kynar/Hylar (70% Kynar) Anodize

* W and H dimension furnished approximately ¼ in. (6 mm) undersize. If the height is 6 inches, the damper will be undersized an ⅛ in. (3mm).

Size Limitations

W x H	Minimum Size	Maximum Size	
		Single Section	Multiple Section
Inches	6 x 6	60 x 74	Unlimited
mm	152 x 152	1524 x 1880	Unlimited

Blade Operation

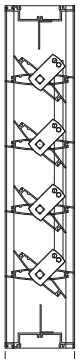

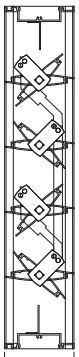

Notes:

- Low profile head and sill are used on sizes less than 17 in. (432mm) high
- Electric actuator and manual quadrant available. Factory supplied actuators are sized for 1500 fpm (7m/s) and fully closed differential pressure of 2 in. wg (.5 kPa). Contact factory for actuator sizing on applications exceeding those limits.
- In applications where airflow could be uneven, such as a discharge fan, it is imperative to verify that at no point the maximum velocity exceeds the damper's cataloged velocity.
- Blades must be horizontal for either horizontal or vertical mount.

Options

- Actuators (24V, 120V, manual, pull chain)
- Actuator mounting (external, external kit (field assembly), internal)
- Flanges
- NEMA enclosures (3, 4, 4X)
- Retaining angles
- Transformers

Flange Options

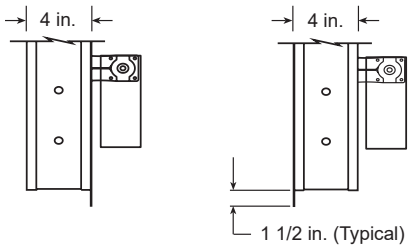

Single Flange Reversed Flange

Shown with optional internally mounted actuator.

Document Links

CATALOG

INSTALLATION

SPECIFICATIONS

DAMPER SELECTION GUIDE

WARRANTY

Pressure Drop Data

AMCA 5.2

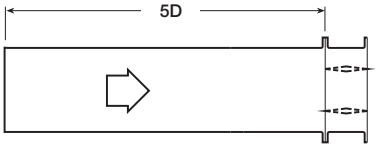

12 in. x 12 in. (305mm x 305mm)

Velocity (fpm)	Pressure Drop (in. wg)
500	0.08
1000	0.31
1500	0.69
2000	1.19
2500	1.84
3000	2.67
3500	3.59
4000	4.64

24 in. x 24 in. (610mm x 610mm)

Velocity (fpm)	Pressure Drop (in. wg)
500	0.01
1000	0.05
1500	0.11
2000	0.19
2500	0.30
3000	0.43
3500	0.58
4000	0.76

36 in. x 36 in. (914mm x 914mm)

Velocity (fpm)	Pressure Drop (in. wg)
500	0.01
1000	0.04
1500	0.09
2000	0.16
2500	0.24
3000	0.35
3500	0.48
4000	0.62

12 in. x 48 in. (305mm x 1219mm)

Velocity (fpm)	Pressure Drop (in. wg)
500	0.01
1000	0.05
1500	0.11
2000	0.20
2500	0.30
3000	0.43
3500	0.59
4000	0.77

48 in. x 12 in. (1219mm x 305mm)

Velocity (fpm)	Pressure Drop (in. wg)
500	0.06
1000	0.23
1500	0.52
2000	0.91
2500	1.43
3000	2.05
3500	2.82
4000	3.69

AMCA 5.3

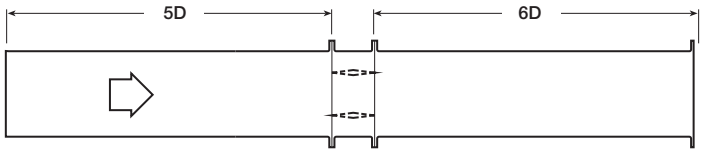

12 in. x 12 in. (305mm x 305mm)

Velocity (fpm)	Pressure Drop (in. wg)
500	0.05
1000	0.20
1500	0.45
2000	0.76
2500	1.19
3000	1.70
3500	2.29
4000	2.97

24 in. x 24 in. (610mm x 610mm)

Velocity (fpm)	Pressure Drop (in. wg)
500	0.01
1000	0.02
1500	0.05
2000	0.10
2500	0.15
3000	0.22
3500	0.30
4000	0.40

36 in. x 36 in. (914mm x 914mm)

Velocity (fpm)	Pressure Drop (in. wg)
500	0.01
1000	0.02
1500	0.04
2000	0.07
2500	0.10
3000	0.15
3500	0.20
4000	0.27

12 in. x 48 in. (305mm x 1219mm)

Velocity (fpm)	Pressure Drop (in. wg)
500	0.01
1000	0.03
1500	0.07
2000	0.12
2500	0.19
3000	0.26
3500	0.36
4000	0.46

48 in. x 12 in. (1219mm x 305mm)

Velocity (fpm)	Pressure Drop (in. wg)
500	0.03
1000	0.13
1500	0.29
2000	0.51
2500	0.81
3000	1.16
3500	1.59
4000	2.09

AMCA 5.5

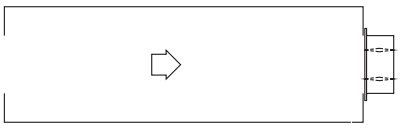

12 in. x 12 in. (305mm x 305mm)

Velocity (fpm)	Pressure Drop (in. wg)
500	0.1
1000	0.40
1500	0.88
2000	1.54
2500	2.41
3000	3.45
3500	4.75
4000	6.09

24 in. x 24 in. (610mm x 610mm)

Velocity (fpm)	Pressure Drop (in. wg)
500	0.03
1000	0.12
1500	0.29
2000	0.52
2500	0.80
3000	1.14
3500	1.60
4000	2.14

36 in. x 36 in. (914mm x 914mm)

Velocity (fpm)	Pressure Drop (in. wg)
500	0.03
1000	0.11
1500	0.26
2000	0.46
2500	0.72
3000	1.04
3500	1.43
4000	1.87

12 in. x 48 in. (305mm x 1219mm)

Velocity (fpm)	Pressure Drop (in. wg)
500	0.03
1000	0.12
1500	0.27
2000	0.49
2500	0.76
3000	1.11
3500	1.53
4000	2.00

48 in. x 12 in. (1219mm x 305mm)

Velocity (fpm)	Pressure Drop (in. wg)
500	0.08
1000	0.29
1500	0.63
2000	1.12
2500	1.76
3000	2.52
3500	3.40
4000	4.52

Greenheck Fan Corporation certifies that the model VCD-40 shown herein is licensed to bear the AMCA Seal. The ratings shown are based on tests and procedures performed in accordance with AMCA Publication 511 and comply with the requirements of the AMCA Certified Ratings Programs. The AMCA Certified Ratings Seal applies to air performance ratings only.

Leakage

Air leakage is based on operation between 32°F (0°C) and 120°F (49°C).
Tested for leakage in accordance with ANSI/AMCA Standard 500-D, Figure 5.5.
Tested for air performance in accordance with ANSI/AMCA Standard 500-D, Figures 5.2, 5.3, and 5.5.

Torque

Data are based on torque of 5.0 in. lb./ft^2 (0.56 N·m) applied to close and seat the damper during the test.

VCD-40	Leakage Class*					
Maximum Damper Width	1 in. wg (0.25 kPa)	2 in. wg (0.5 kPa)	3 in. wg (0.75 in. wg)	4 in. wg (1 kPa)	5 in. wg (1.25 kPa)	6 in. wg (1.5 kPa)
36 in. (914mm)	1A	1	1	1	1	1
48 in. (1219mm)	1A	1	1	1	2	N/A
60 in. (1524mm)	1A	2	2	N/A	N/A	N/A

*Leakage Class Definitions

The ***maximum*** allowable leakage is defined as the following:

- Leakage Class 1A - 3 cfm/ft^2 at 1 in. wg (class 1A is only defined at 1 in. wg).
- Leakage Class 1
  - 4 cfm/ft^2 at 1 in. wg
  - 8 cfm/ft^2 at 4 in. wg
  - 11 cfm/ft^2 at 8 in. wg
  - 12.6 cfm/ft^2 at 10 in. wg

Temperature Limitations

Blade Seal	Temperature Range
TPE	-10°F to 180°F (-23°C to 82°C)
Silicone	-40°F to 250°F (-40°C to 121°C)

Space Envelopes

On dampers less than 18 in. (457mm) high, actuators may also require clearances above and/or below the damper frame. “B” and “T” dimensions are worst case clearance requirements for some dampers less than 18 in. (457mm) high. All damper sizes under 18 in. (457mm) high do not require these worst case clearances. If space availability above or below the damper is limited, each damper size should be individually evaluated.

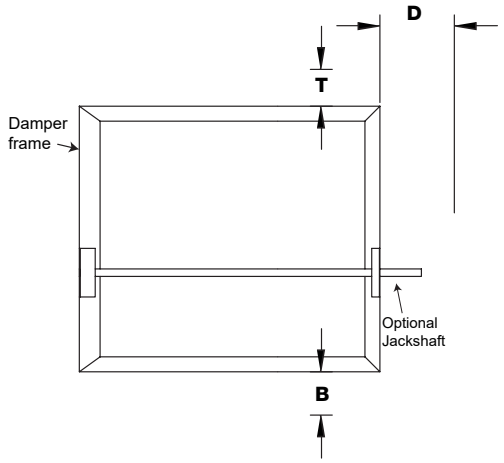

Actuator Type/Model	Height	T	B	D
	Inches	Inches		
AFBUP (-S) and FSNF Series, Belimo MSxx20 Series, Honeywell	≥6 to <10	0	12¾	6¼
	≥10 to <18	0	2	6¼
	≥18	0	0	6¼
FSLF, LF and TFB Series, Belimo	≥6 to <10	0	3½	6¼
	≥10	0	0	6¼
MSxx04 & MSxx09 Series, Honeywell	≥6 to <9	0	4¾	6¼
	≥9	0	0	6¼
MS75xx Series, Honeywell	≥6 to <10	0	12¾	6¼
	≥10 to <18	0	7	6¼
	≥18	0	0	6¼
GRD and GVD Series, Siemens	≥6 to <10	0	12¾	6¼
	≥10 to <18	0	2	6¼
	≥18	0	0	6¼
GJD Series, Siemens	≥6 to <10	0	3½	6¼
	≥10 to <18	0	0	6¼
	≥18	0	0	6¼

Actuator Mounting

Actuators may be installed at the factory, shipped loose with the necessary linkage and brackets for mounting, or field supplied. For more detail information on actuator mounting, click on link below or scan QR code.

ACTUATOR MOUNTING

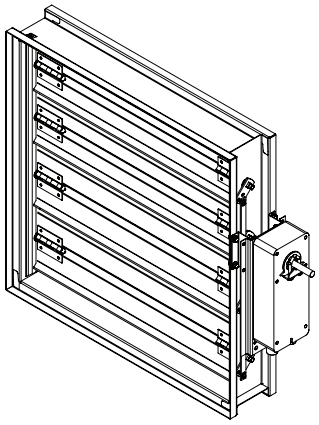

Non-jackshaft external right

Clearance Requirements

This drawing depicts the worse case clearance requirements for an actuator with a jackshaft.

Internal mount only Actuator model	A	B	C
All except - EFB & EFCX Series	7 ¾ in (197 mm)	3 ¾ in (95 mm)	5 ⅜ in (137 mm)
EFB & EFCX Series	8 ½ in (216 mm)	6 in (152mm)	8 ½ in (216 mm)

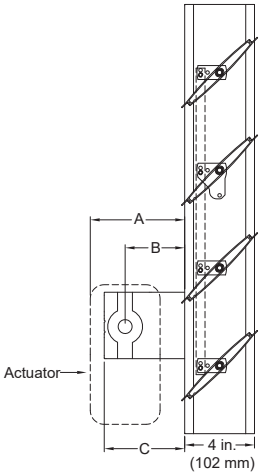

Multi-Section Dampers

Dampers larger than the maximum single section size, will be made up of a multiple of equal size sections.

Note: Dampers larger than 60 in. x 74 in. (1524mm x 1880mm) are not intended to be structurally self supporting. Refer to IOM document 463384 for structural support requirements on multi-section assemblies.

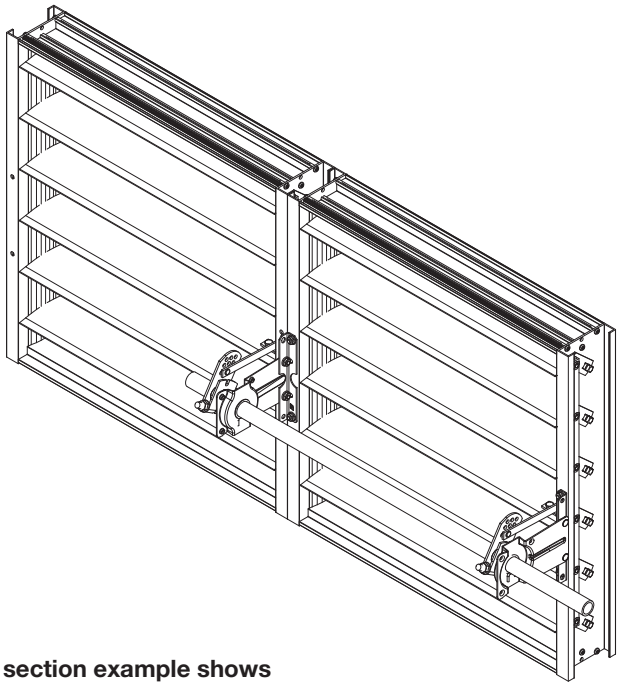

2 section example shows single jackshaft driving multiple sections

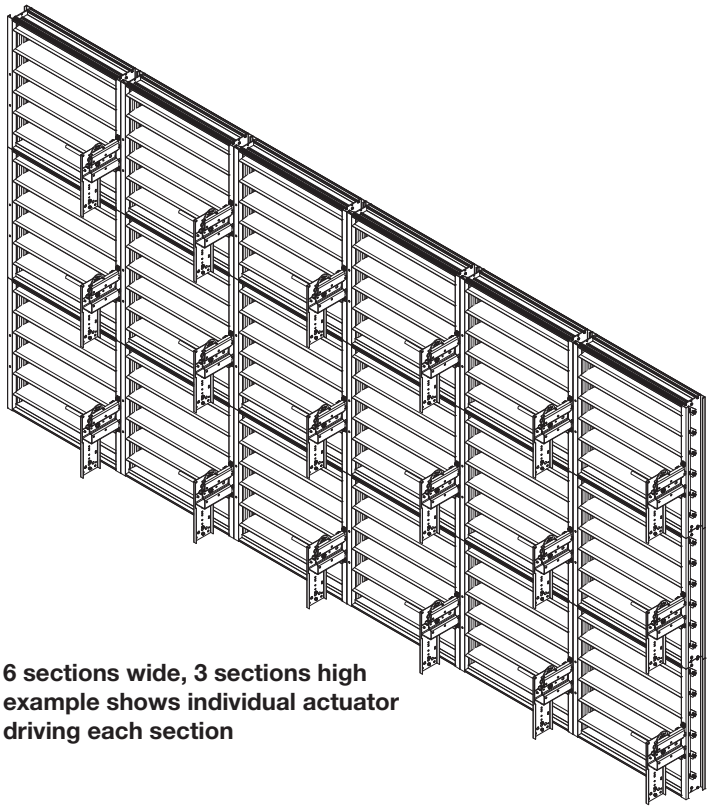

6 sections wide, 3 sections high example shows individual actuator driving each section

P.O. Box 410 • Schofield, WI 54476-0410 • 715.359.6171 • greenheck.com

Copyright ® 2024 Greenheck Fan Corporation

Greenheck Fan Corporation reserves the right to make product changes without notice