Submittal: XG-2800H

Linear Bar Grille
3/16" Flangeless Frame, Aluminum

Model: XG-2800H 1/8" Bars on 1/4" Center - 0°, 15° and 30° Deflection Concealed Mounting Ceiling / Side Wall

XG-2800H - Concealed Mounting Ceiling / Side Wall

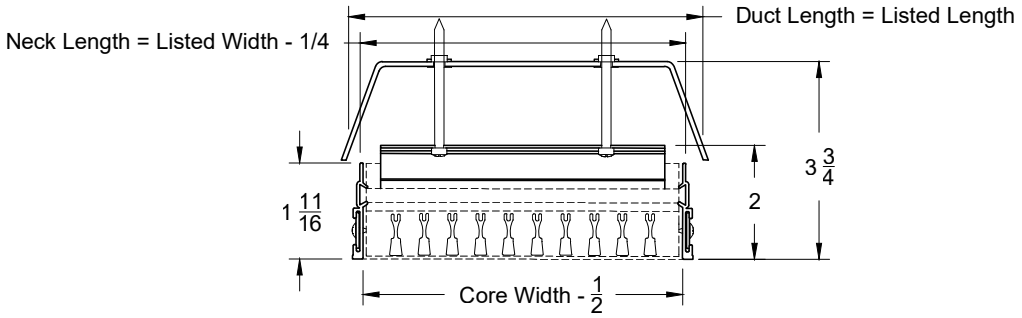

End View

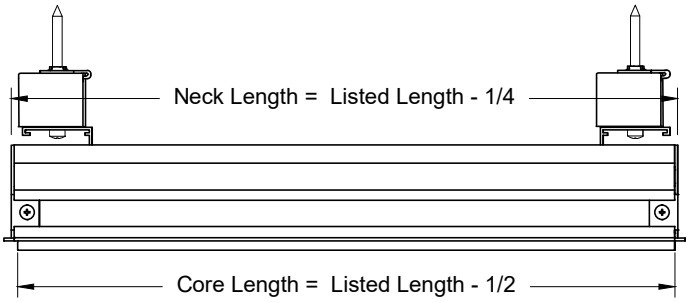

Side View

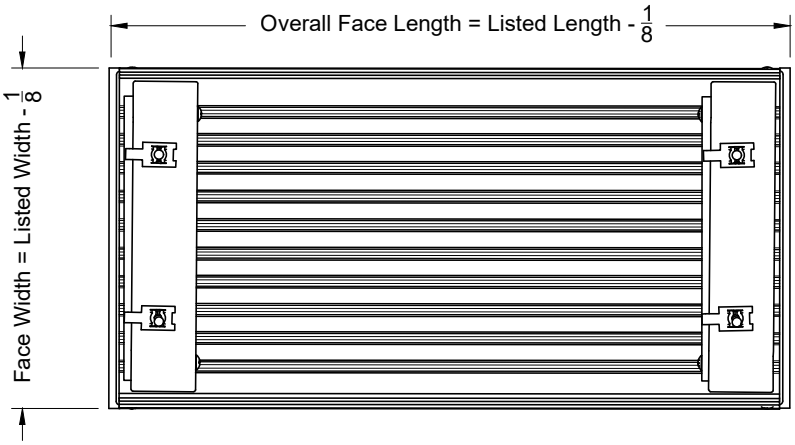

Face View

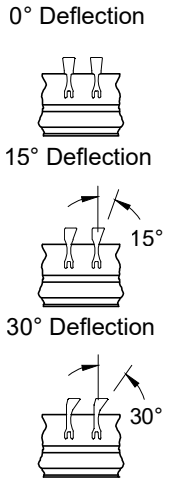

1. Available Finishes	2. Available Accessories	3. Available Options	4. Construction Details
Standard Finish: 01 White Optional Finish (Extra Charge) 02 Satin Silver 03 Black 04 Clear Anodized 28 - Special/Setup Charge			• All Dimensions ±1/16"

Revision: Date: 8/2/2022 Units: Inches Page: 1 OF 1