6786

Adjustable Louver | Drainable Blade | Fabricated Steel

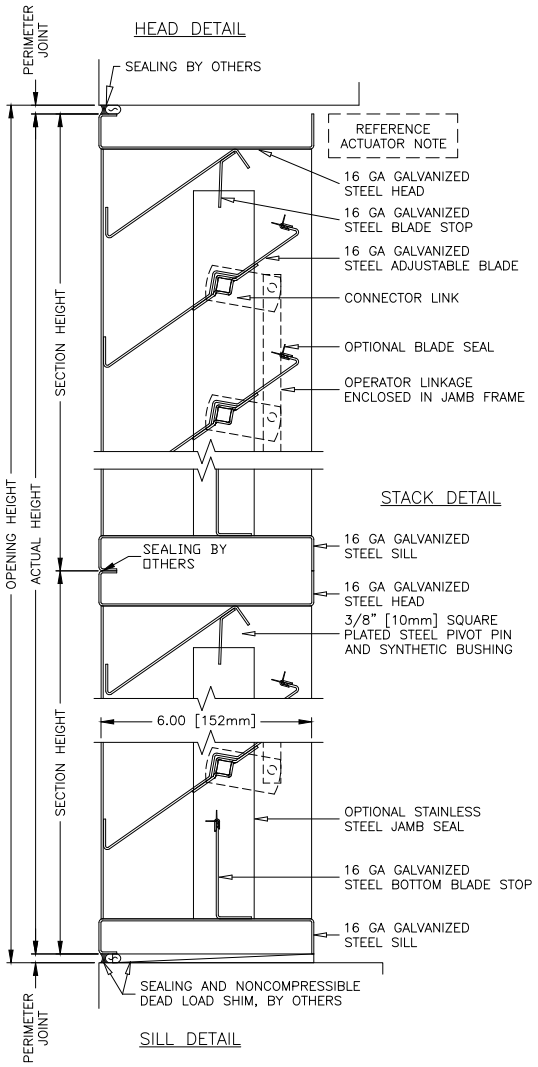

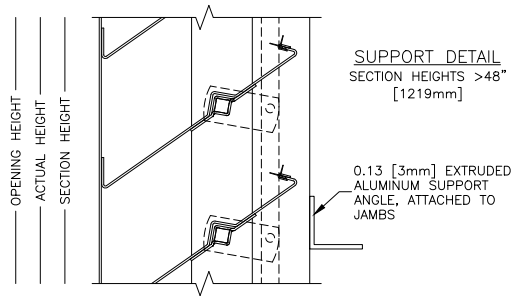

SECTIONS OF A 2-WIDE LOUVER MAY BE FACTORY JACKSHAFTED TOGETHER IF SIZING ALLOWS AND IF AN ACTUATOR IS SELECTED. JACKSHAFT COMPONENTS ARE NOT SHOWN BELOW.

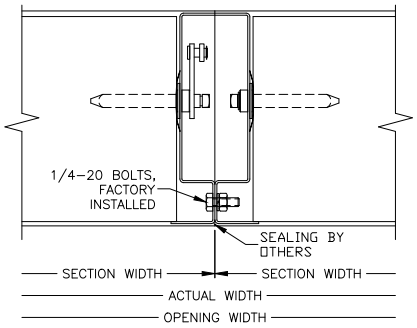

MULLION DETAIL
JACKSHAFTED

NOTE: ACTUATOR REQUIRES A MINIMUM OF 7" [178mm] OF CLEARANCE BEHIND THE LOUVER. ACTUAL VALUE VARIES BY ACTUATOR TYPE. STANDARD ACTUATOR LOCATION IS TOP CENTER OF EACH SECTION AS VIEWED FROM INTERIOR.

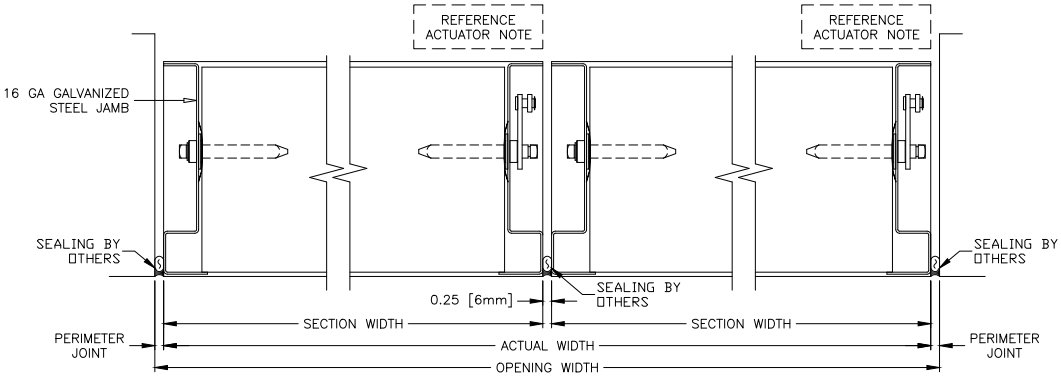

JAMB DETAIL
NON-LINKED SIDE

MULLION DETAIL
NON-JACKSHAFTED

JAMB DETAIL
LINKED SIDE

AIROLITE®
The look that works.™

© April 2022 | The Airolite Company, LLC