GREENHECK
Building Value in Air.

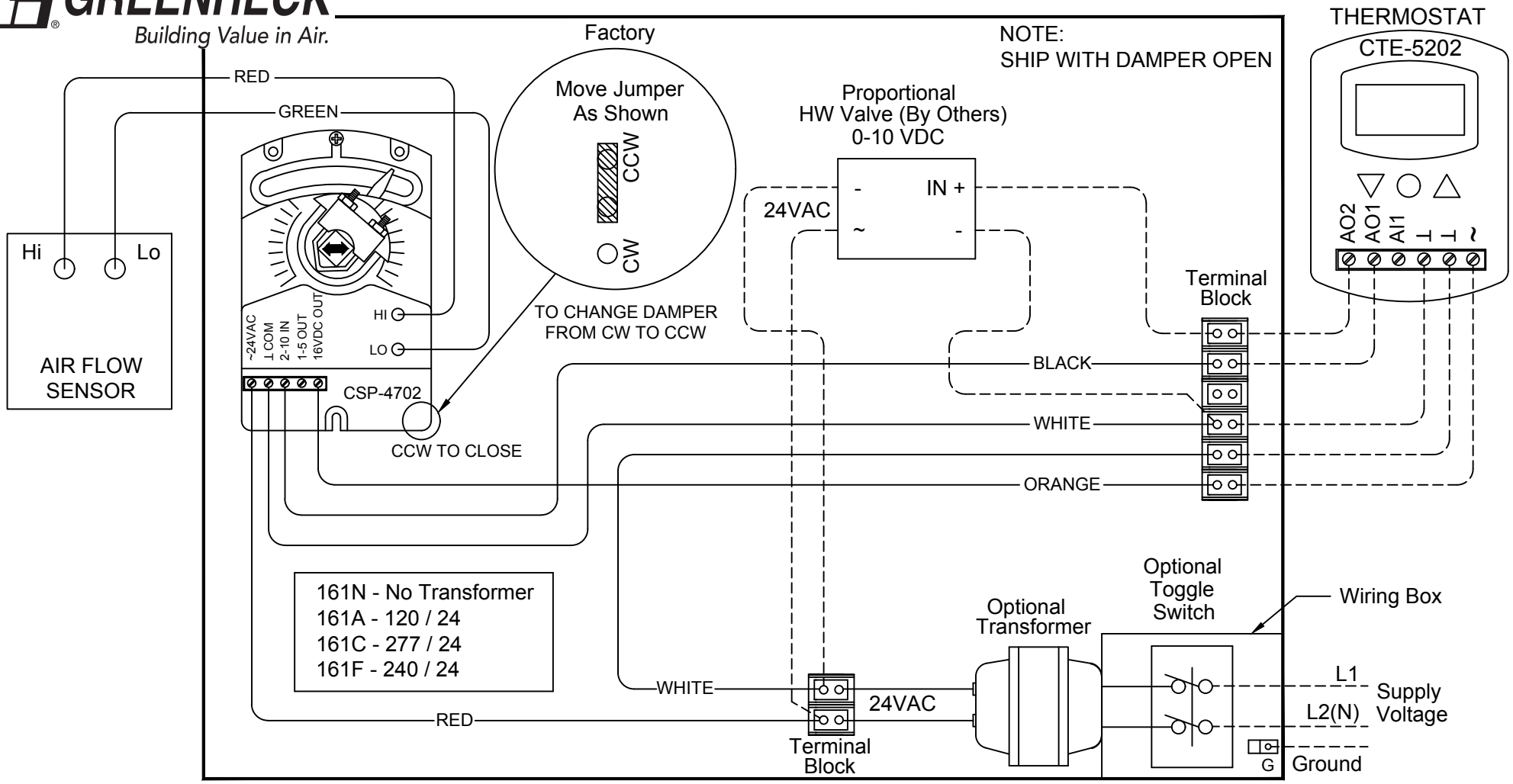

——— Factory Piping
- - - - - - Field Piping By Others

Controller/Actuator-KMC CSP-4702, 24 Vac,
Thermostat-CTE-5202
Transformer- 24VAC, 40 VA Min.

WARNING: 24V circuit is dedicated, Do not add or connect other items.

THCD161-HW-PROP

(CDS) ATU\CONTROL DIAGRAMS\ANALOG\

Phone: 715.359.6171
Fax: 715.355.2399
Parts : 800.355.5354
gfcinfo@greenheck.com
www.greenheck.com

ECN. No.	Rev	Description	Date	Rev'd By:
N/a	C	Removed logo	7/7/21	CG
N/A	B	Removed AI1 Wire From T'Stat	10/02/20	DSG
N/A	A	UPDATED TO NEW FORMAT	08/08/17	RML

Unless Otherwise Specified:
1. Dimensions Are In Inches.
2. Tolerances Are:

Fractions	Decimals	Angles
±1/32	±.X = .1 ±.XX = .02 ±.XXX = .010	±1°

Control Wiring Diagram

Single Duct Air Terminal w/ HW Coil
Analog Electronic for Proportional HW Valve

DWN. BY DB	DATE 11/14/02	DWG. NO. THCD161-HW-PROP	REV. C
CHK'D BY DSG	SCALE NTS		