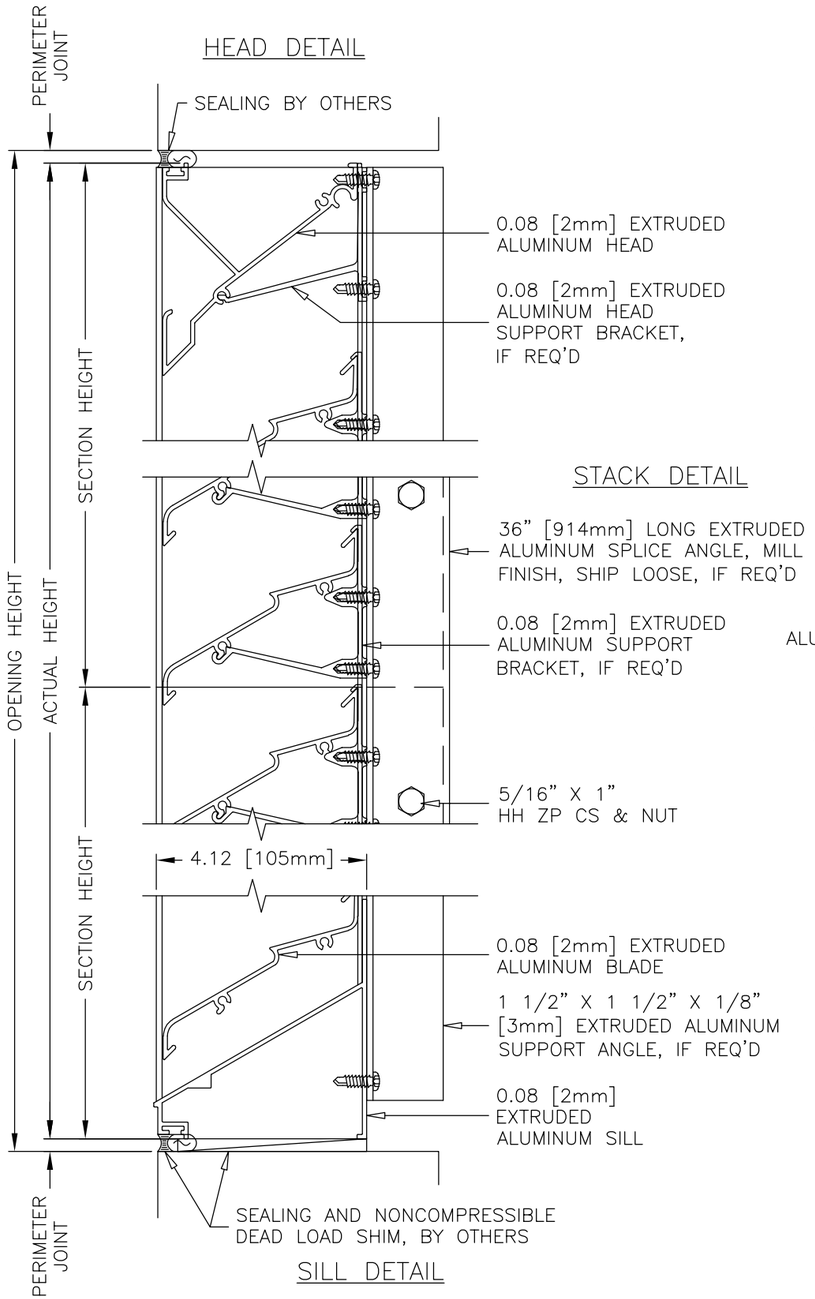

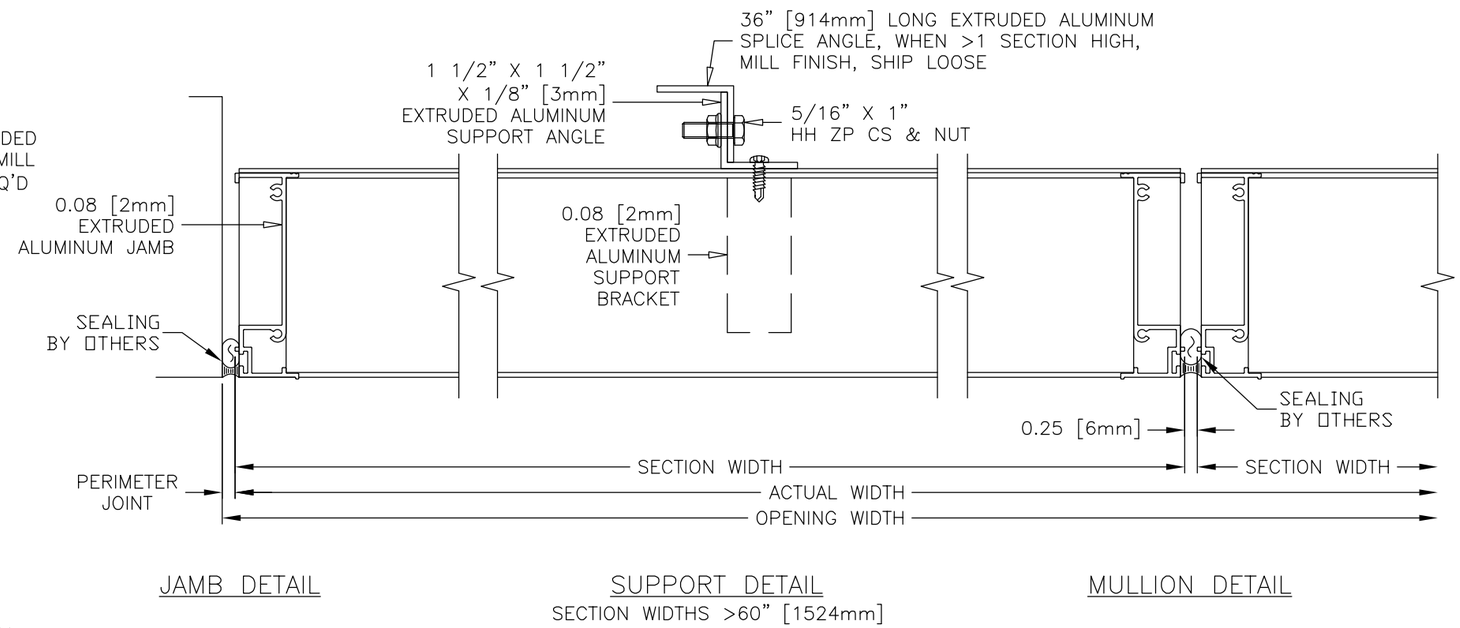

AIROLITE®
The look that works.™

MODEL: K630

SHEET: 1 OF 1

© COPYRIGHT 2008, THE AIROLITE CO. LLC